This operation manual is intended for users with basic knowledge of electricity and electric devices.
* LSLV-G100 is the official name for G100.

Safety Information

Read and follow all safety instructions in this manual precisely to avoid unsafe operating conditions, property damage, personal injury, or even death.

Safety Symbols in This Manual

Danger

Indicates an imminently hazardous situation which, if not avoided, will result in severe injury or even death.

Warning

Indicates a potentially hazardous situation which, if not avoided, could result in injury or even death.

Caution

Indicates a potentially hazardous situation which, if not avoided, could result in minor injury or property damage.

Safety Information

Danger

- Never remove the product cover or touch the internal printed circuit board (PCB) or any contact points when the power is on. Also, do not start the product when the cover is open. This may cause an electrical shock due to the exposure of high voltage terminals or live parts.
- Even if the power is off, do not open the cover unless it is absolutely necessary like for the wiring operation or for regular inspection. Opening the cover may still cause an electrical shock even after the power is blocked because the product has been charged for a long period of time.
- Wait at least 10 minutes before opening the covers and exposing the terminal connections. Before starting work on the inverter, test the connections to ensure all DC voltage has been fully discharged. Otherwise it may cause an electrical shock and result in personal injury or even death.

⚠ Warning

- Make sure to install ground connection between the equipment and the motor for safe use. Otherwise it may cause an electrical shock and result in personal injury or even death.
- Do not turn on the power if the product is damaged or faulty. If you find that the product is faulty, disconnect the power supply and have the product professionally repaired.
- The inverter becomes hot during operation. Avoid touching the inverter until it has cooled to avoid burns. Avoid touching the inverter until it has cooled to avoid burns.
- Do not allow foreign objects, such as screws, metal chips, debris, water, or oil to get inside the inverter. Allowing foreign objects inside the inverter may cause the inverter to malfunction or result in a fire.
- Do not operate the switch with wet hands. Otherwise it may cause an electrical shock and result in personal injury or even death.
- Check the information about the protection level for the circuits and devices.

  The connection terminals and parts below have electrical protection class 0. This means that the protection class of the circuit depends on basic insulation and there is a danger of electric shock if the basic insulation is not working properly. Therefore, take the same protective measures as handling the power line when connecting wires to the terminals or the device below, or when installing or using the devices.
  - Multi-function Input: P1–P8, CM
  - Analog Input/Output: VR, V1, V2, I2(PTC), AO, IO
  - Digital Output: 24, A1/B1/C1, A2/C2, Q1/EG
  - Safety Input: SA/SB/SC
  - Communication: S+/ S-
  - Fan
- The protection level of this equipment is electrical protective class 1.

ⓘ Caution

- Do not change the inside of the product at your own discretion. This may result in injury or damage to the product due to failure or malfunction. Also, products changed at your own discretion will be excluded from the product warranty.
- Do not use the inverter for single phase motor operation as it has been designed for three phase motor operation. Using a single phase motor may damage the motor.
- Do not place heavy objects on top of electric cables. Heavy objects may damage the cable and result in electric shock.

Note

Following IEC 60439-1, the maximum allowed short-circuit current at the power inlet is 100kA. Depending on the selected MCCB, the G100 inverter is suitable for use in circuits capable of delivering a maximum of 100 kA symmetrical current at the drive's maximum rated voltage. The following table shows the recommended MCCB for RMS symmetrical amperes. (Maximum allowed prospective short-circuit current of G100C at the input power connection is 5kA.)

Remarque

Le courant maximum de court-circuit présumé autorisé au connecteur d'alimentation électrique est défini dans la norme IEC 60439-1 comme égal à 100 kA. Selon le MCCB sélectionné, la série LSLV-G100 peut être utilisée sur des circuits pouvant fournir un courant RMS symétrique de 100 kA maximum en ampères à la tension nominale maximale du variateur. Le tableau suivant indique le MCCB recommandé selon le courant RMS symétrique en ampères. (Le courant de court-circuit présumé maximal autorisé du G100C au niveau de la connexion d'alimentation d'entrée est de 5 kA.)

Working Voltage	UTE100E	UTE100H	UTS150L
240 V(50/60 Hz)	50 kA	100 kA	150 kA
480 V(50/60 Hz)	25 kA	65 kA	100 kA

Quick Reference Table

The table below is a summary of situations that users encounter frequently while using the product. For faster and easier information searching, see the table below.

Situation	Ref.
I want to run a slightly higher rated motor than the inverter's rated capacity.	p.211
I want to configure the inverter to start operating as soon as the power source is applied.	p.96
I want to configure the motor's parameters.	p.156
I want to set up sensorless vector control.	p.159
Something seems to be wrong with the inverter or the motor.	p.231, p.345
What is auto tuning?	p.156
What are the recommended wiring lengths?	p.42
The motor is too noisy.	p.176
I want to apply PID control on my system.	p.149
What are the factory default settings for P1–P8 multi-function terminals?	p.38
I want to check recent trips and fault histories.	p.313
I want to change the inverter's operation frequency using volume resistance.	p.64
I want to install a frequency meter on the analog terminal.	p.39
I want to check the motor's current using an ammeter.	p.68
I want to operate the inverter using a multi-step speed configuration.	p.91
The motor is too hot.	p.206
The inverter is too hot.	p.220
The cooling fan does not work.	p.180
I want to know how to store the inverter when it is not used.	p.358

Table of Contents

1 Preparing the Installation 1

1.1 Product Identification 1

1.2 Part Names 3

1.3 Installation Considerations 7

1.4 Selecting the Installation Site 8

1.5 Cable Selection 12

2 Installing the Inverter 15

2.1 Mount on the Wall or within the Panel 17

2.2 Wiring 20

2.3 Post-Installation Checklist 47

2.4 Test Run 49

3 Learning to Perform Basic Operations 52

3.1 About the Keypad 52

3.1.1 About the Display 53
3.1.2 Operation Keys 54
3.1.3 Control Menu 55

3.2 Learning to Use the Keypad 55

3.2.1 Group and Code Selection 56
3.2.2 Navigating Directly to Different Codes (Jump Codes) 57
3.2.3 Setting Parameter Values 58

3.3 Actual Application Examples 59

3.3.1 Acceleration Time Configuration 59
3.3.2 Frequency Reference Configuration 60
3.3.3 Jog Frequency Configuration 61
3.3.4 Parameter Initialization 62
3.3.5 Frequency Setting (Keypad) and Operation (via Terminal Input) .. 63
3.3.6 Frequency Setting (Potentiometer) and Operation (Terminal Input) 64
3.3.7 Frequency setting with (internal) potentiometer and operation command with the keypad [RUN] key 66

3.4 Monitoring the Operation 68
3.4.1 Output Current Monitoring 68
3.4.2 Trip Condition Monitor 69

4 Learning Basic Features 72

4.1 Frequency Reference Configuration 75
4.1.1 Set the Operation Frequency from the Keypad - Direct Input 75
4.1.2 Set the Operation Frequency from the Keypad - Using [▲] and [▼] keys 76
4.1.3 V1 Terminal as the Source 76
4.1.4 V2 Terminal as the Source 82
4.1.5 Built-in Volume Input (V0) as the Source 88
4.1.6 Setting a Reference Frequency using Input Current (I2) 88
4.1.7 Frequency Reference Source Configuration for RS-485 Communication 90

4.2 Frequency Hold by Analog Input 90

4.3 Multi-step Frequency Configuration 91

4.4 Command Source Configuration 93
4.4.1 The Keypad as a Command Input Device 93
4.4.2 Terminal Block as a Command Input Device (Fwd/Rev Run Commands) 93
4.4.3 Terminal Block as a Command Input Device (Run and Rotation Direction Commands) 94
4.4.4 RS-485 Communication as a Command Input Device 95

4.5 Forward or Reverse Run Prevention 95

4.6 Power-on Run 96

4.7 Reset and Restart 97

4.8 Setting Acceleration and Deceleration Times 98
4.8.1 Acc/Dec Time Based on Maximum Frequency 98
4.8.2 Acc/Dec Time Based on Operation Frequency 99
4.8.3 Multi-step Acc/Dec Time Configuration 100
4.8.4 Acc/Dec Time Switch Frequency 102

4.9 Acc/Dec Pattern Configuration 103

4.10 Stopping the Acc/Dec Operation 105

4.11 V/F Control 105
4.11.1 Linear V/F Pattern Operation 105

4.11.2 Square Reduction V/F Pattern Operation 106
4.11.3 User V/F Pattern Operation 107

4.12 Torque Boost 109

4.12.1 Manual Torque Boost 109
4.12.2 Auto Torque Boost 110

4.13 Motor Output Voltage Adjustment 111

4.14 Start Mode Setting 111

4.14.1 Accelerating Start 111
4.14.2 DC Braking After Start 112
4.14.3 Initial Excitation of Stop Status (Pre-excite) 113

4.15 Stop Mode Setting 113

4.15.1 Deceleration Stop 113
4.15.2 DC Braking After Stop 114
4.15.3 Free Run Stop 115
4.15.4 Power Braking 116

4.16 Frequency Limit 116

4.16.1 Frequency Limit Using Maximum Frequency and Start Frequency 116
4.16.2 Frequency Limit Using Upper and Lower Limit Frequency Values 117
4.16.3 Frequency Jump 118

4.17 2nd Operation Mode 119

4.18 Multi-Function Input Terminal Control 120

4.19 Fire Mode Operation 121

4.20 User Sequence Settings 123

5 Learning Advanced Features 132

5.1 Operating with Auxiliary References 134

5.2 Jog Operation 138

5.2.1 Jog Operation 1-Forward 138
5.2.2 Jog Operation 2-Fwd/Rev Jog by Multi-Function Terminal 139

5.3 Up-down Operation 140

5.4 3-Wire Operation 143

5.5 Safe Operation mode 145

5.6 Dwell Operation 146
5.7 Slip Compensation Operation 148
5.8 PID Control 149
5.8.1 Basic PID Operation 150
5.8.2 Pre-PID Operation 154
5.8.3 PID Operation Sleep mode 155
5.8.4 PID Switching (PID Openloop) 156
5.9 Auto-tuning 156
5.10 Sensorless Vector Control for Induction Motors 159
5.10.1 Sensorless Vector Control Operation Setting for Induction Motors 161
5.10.2 Sensorless Vector Control Operation Guide for Induction Motors 164
5.11 Energy Buffering Operation (Kinetic Energy Buffering) 166
5.12 Energy Saving Operation 170
5.12.1 Manual Energy Saving Operation 170
5.12.2 Automatic Energy Saving Operation 170
5.13 Speed Search Operation 171
5.14 Auto Restart Settings 175
5.15 Operational Noise Settings (Change of Carrier Frequency Settings)..... 176
5.16 2nd Motor Operation 178
5.17 Commercial Power Source Transition 179
5.18 Cooling Fan Control 180
5.19 Input Power Frequency and Voltage Settings 181
5.20 Parameter save 181
5.21 Parameter Initialization 182
5.22 Parameter Lock 183
5.23 Changed Parameter Display 184
5.24 Timer Settings 184
5.25 Brake Control 185
5.26 Multi-Function Relay On/Off Control 187
5.27 Press Regeneration Prevention 188
5.28 Analog Output 190

5.28.1 Voltage Analog Output 190
5.28.2 Current Analog Output..... 193

5.29 Digital Output..... 195

5.29.1 Multi-Function Relay Settings 195
5.29.2 Trip Output to Multi-Function Relay 200
5.29.3 Multi-Function Relay Terminal Delay Time Settings 201

5.30 Base Block..... 202

5.31 Overvoltage trip(OVT) suppression..... 203

5.32 Setting the output overcurrent suppression method 204

5.33 Prevention of output current hunting 204

6 Learning Protection Features..... 206

6.1 Motor Protection 206

6.1.1 Electronic Thermal Motor Overheating Prevention (ETH) 206
6.1.2 Motor Temperature Sensing 208
6.1.3 Overload Early Warning and Trip 211
6.1.4 Stall Prevention and Flux Braking..... 213

6.2 Inverter and Sequence Protection..... 218

6.2.1 Input/output Open-phase Protection 218
6.2.2 External Trip Signal 219
6.2.3 Inverter Overload Protection..... 220
6.2.4 Speed Command Loss 220
6.2.5 Dynamic Braking (DB) Resistor Configuration 222
6.2.6 Under load Fault Trip and Warning..... 225
6.2.7 Fan Fault Detection 227
6.2.8 Lifetime Diagnosis of Components 228
6.2.9 Low Voltage Fault Trip..... 229
6.2.10 Output Block by Multi-Function Terminal 229
6.2.11 Trip Status Reset..... 230
6.2.12 Inverter Diagnosis State 230
6.2.13 Operation Mode on Option Card Trip..... 230
6.2.14 No Motor Trip 231
6.2.15 Low Voltage Trip 2 232
6.2.16 Inverter Pre-overheat Warning 232
6.2.17 Torque Detection Protection Action 233

6.3 Fault/Warning List..... 235

7 RS-485 Communication Features 238

7.1 Communication Standards 238

7.2 Communication System Configuration 240

7.2.1 Communication Line Connection 240
7.2.2 Setting Communication Parameters 241
7.2.3 Setting Operation Command and Frequency 242
7.2.4 Command Loss Protective Operation 243
7.2.5 Setting IDLE Mode behavior 244
7.2.6 Setting Virtual Multi-Function Input 245
7.2.7 Saving Parameters Defined by Communication 245
7.2.8 Total Memory Map for Communication 246
7.2.9 Parameter Group for Data Transmission 246

7.3 Communication Protocol 247

7.3.1 LS INV 485 Protocol 247
7.3.2 Modbus-RTU Protocol 253

7.4 DriveView9 256

7.5 Compatible Common Area Parameter 259

7.6 G100 Expansion Common Area Parameter 262

7.6.1 Monitoring Area Parameter (Read Only) 262
7.6.2 Control Area Parameter (Read/ Write) 267
7.6.3 Memory Control Area Parameter (Read and Write) 269

8 Table of Functions 272

8.1 Operation Group 272

8.2 Drive Group (PAR→dr) 273

8.3 Basic Function Group (PAR→bA) 277

8.4 Expanded Function Group (PAR→Ad) 281

8.5 Control Function Group (PAR→Cn) 287

8.6 Input Terminal Block Function Group (PAR→In) 290

8.7 Output Terminal Block Function Group (PAR→OU) 295

8.8 Communication Function Group (PAR→CM) 301

8.9 Application Function Group (PAR→AP) 306

8.10 Protection Function Group (PAR→Pr) 308

8.11 2nd Motor Function Group (PAR→M2) 314

8.12 User Sequence Group(PAR→US) 316
8.13 User Sequence Function Group(PAR→UF) 319

9 Troubleshooting 340
9.1 Trip and Warning 340
9.1.1 Fault Trips 340
9.1.2 Warning Messages 344
9.2 Troubleshooting Fault Trips 345
9.3 Other Faults 348

10 Maintenance 354
10.1 Regular Inspection Lists 354
10.1.1 Daily Inspections 354
10.1.2 Annual Inspections 356
10.1.3 Bi-annual Inspections 357
10.2 Storage and Disposal 358
10.2.1 Storage 358
10.2.2 Disposal 358

11 Technical Specification 360
11.1 Input and Output Specification 360
11.2 Product Specification Details 364
11.3 External Dimensions 367
11.4 Peripheral Devices 378
11.5 Fuse and Reactor Specifications 379
11.6 Terminal Screw Specification 381
11.7 Braking Resistor Specification 383
11.8 Continuous Rated Current Derating 384
11.9 Heat Emission 388
11.10 Remote Keypad Option 389
11.11 External Filters 391

12 Safety Function STO (Safe Torque Off) 392

12.1 Safety Standards 392
12.2 Safety Features Description 393
12.3 Safety Operation Description 394

Product Warranty 395

Index 399

1 Preparing the Installation

This chapter provides details on product identification, part names, correct installation and cable specifications. To install the inverter correctly and safely, carefully read and follow the instructions.

1.1 Product Identification

The G100 Inverter is manufactured in a range of product groups based on drive capacity and power source specifications. Product name and specifications are detailed on the rating plate. Check the product specification before installing the product and make sure that it is suitable for the intended use. For more detailed product specifications, refer to **11.1 input and Output Specification** on page **360**.

Note

Open the packaging and check the product name first and whether that the product is free from defects. If the product is found to be faulty, contact your supplier.

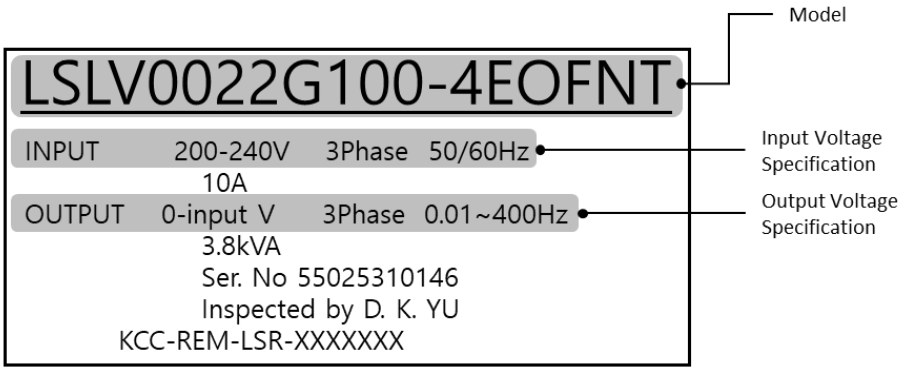

LSLV 0022 G100(C) - 4EOFNT

Motor Capacity

0004 – 0.4kW
0008 – 0.75kW
0015 – 1.5kW
0022 – 2.2kW
0040 – 4.0kW
0055 – 5.5kW
0075 – 7.5kW
0110 – 11kW
0150 – 15kW
0185 – 18.5kW
0220 – 22kW

Series name

C – Compact type(0.4~4.0kW)

Input Voltage

2 – 3 phase 200V ~ 240V
4 – 3 phase 380V ~ 480V

Keypad

E – LED Keypad

UL Type

O – UL Open Type
E – UL Type 1

EMC filter

N – Non Built-in EMC filter
F – Built-in EMC filter(C3)

Reactor

N – Non-Reactor

Safety

Blank – Non-Safety
T – Safety*

* For information on safety products, please refer to the Safety Manual.

1.2 Part Names

See the assembly diagram below for the part names. Detailed images may vary between product groups.

0.4~4.0 kW

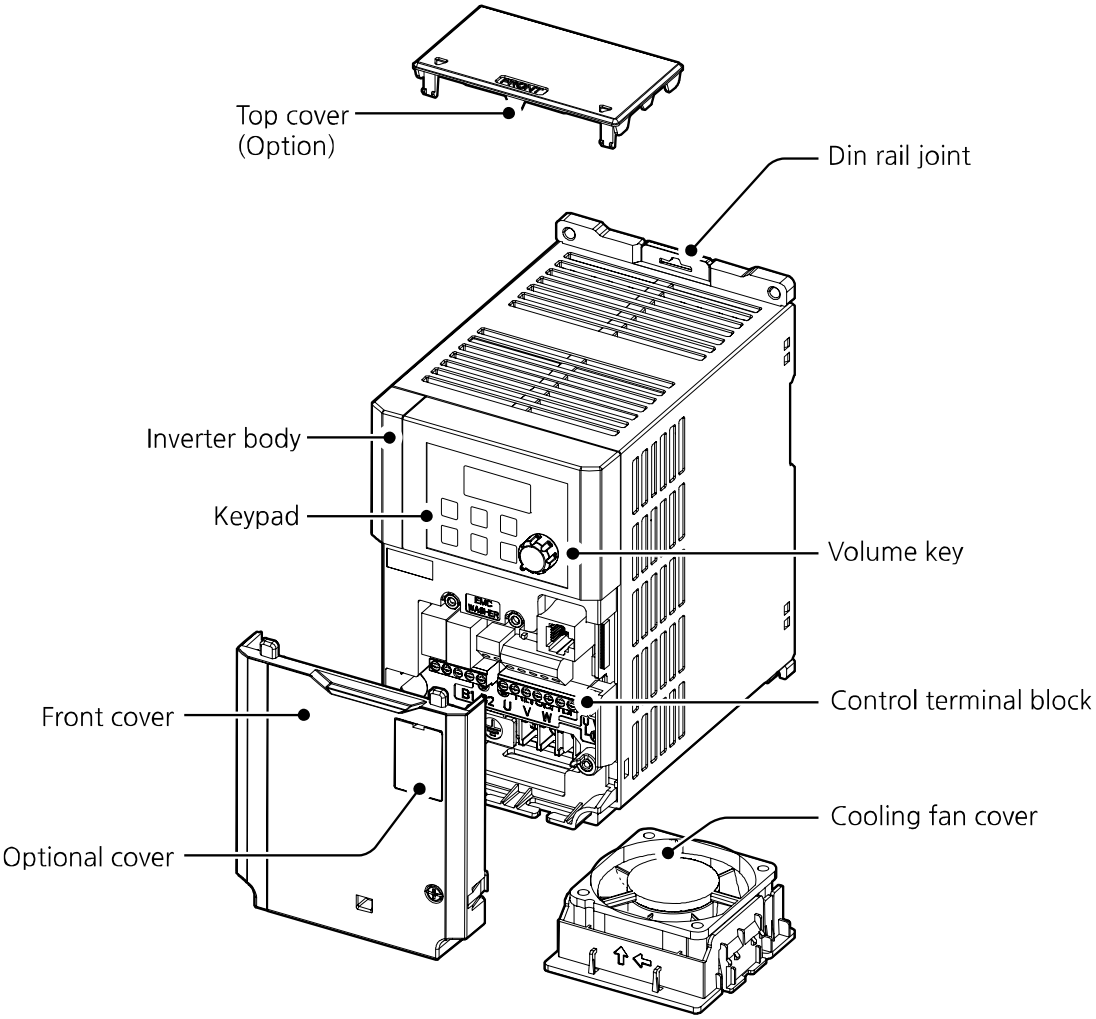

0.4~4.0 kW (G100C)

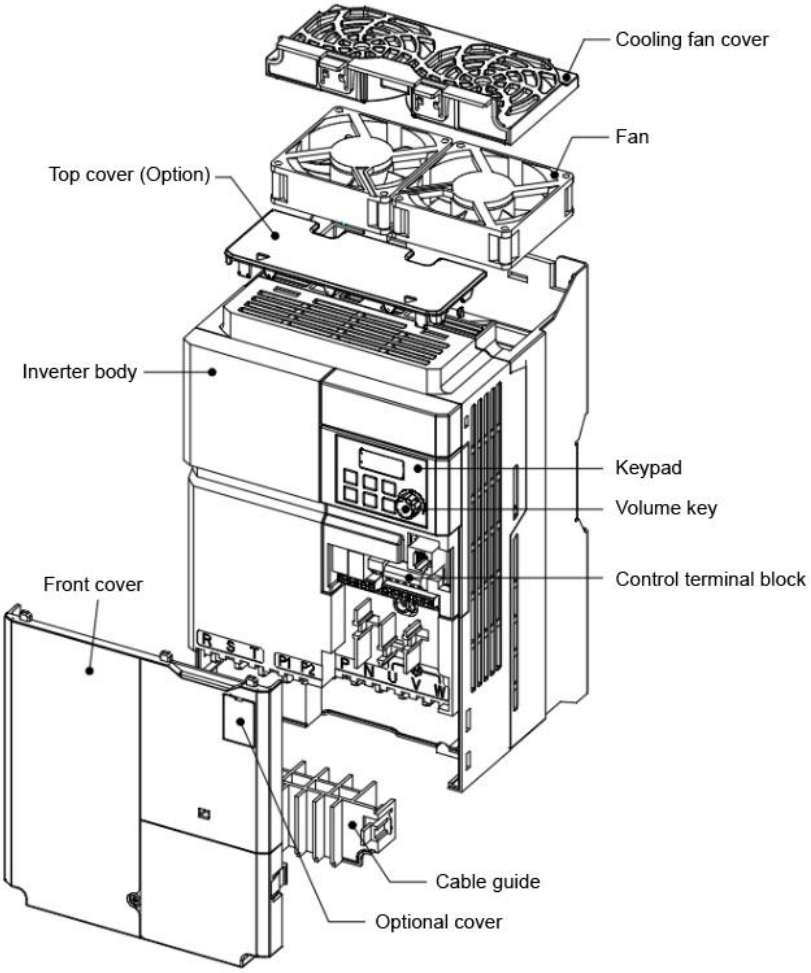

5.5~7.5 kW

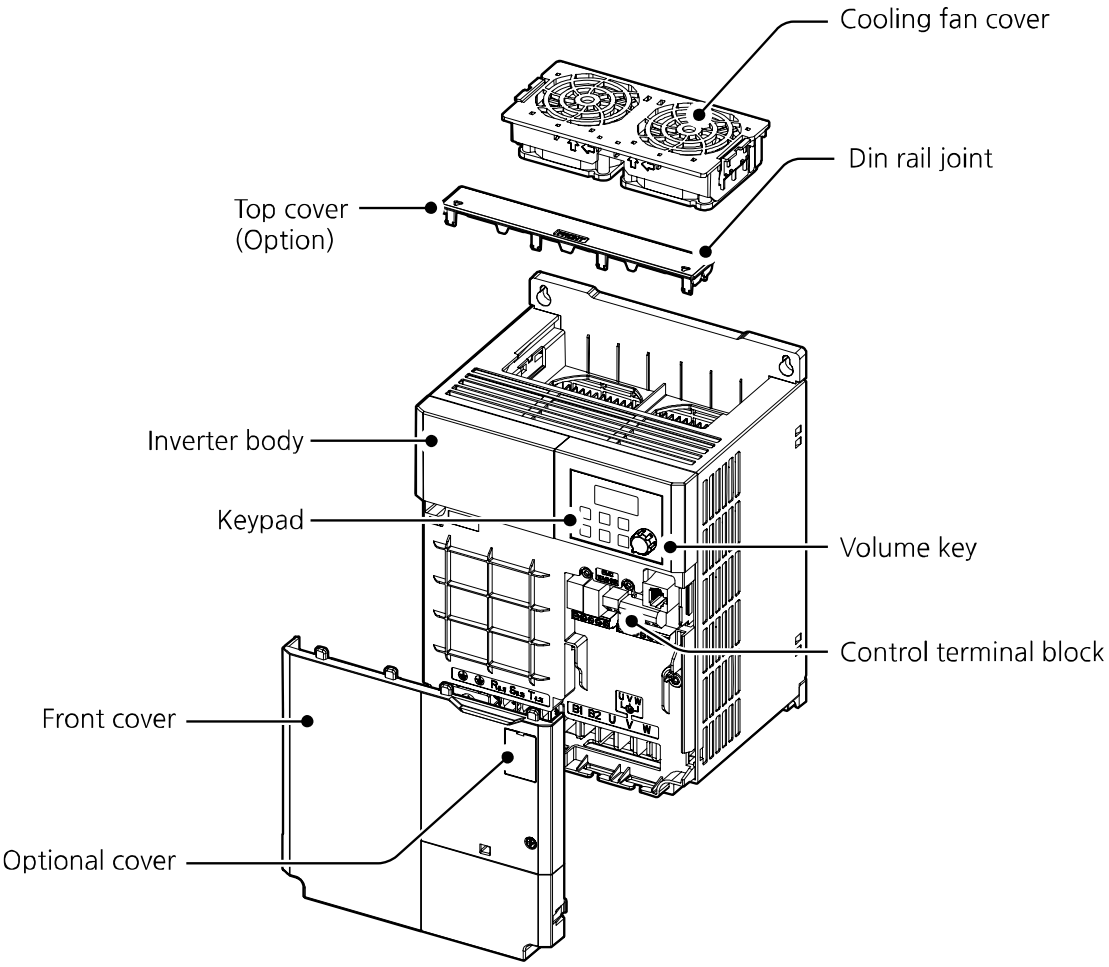
Cooling fan cover
Din rail joint
Top cover
(Option)
Inverter body
Keypad
Volume key
Control terminal block
Front cover
Optional cover

11~22 kW

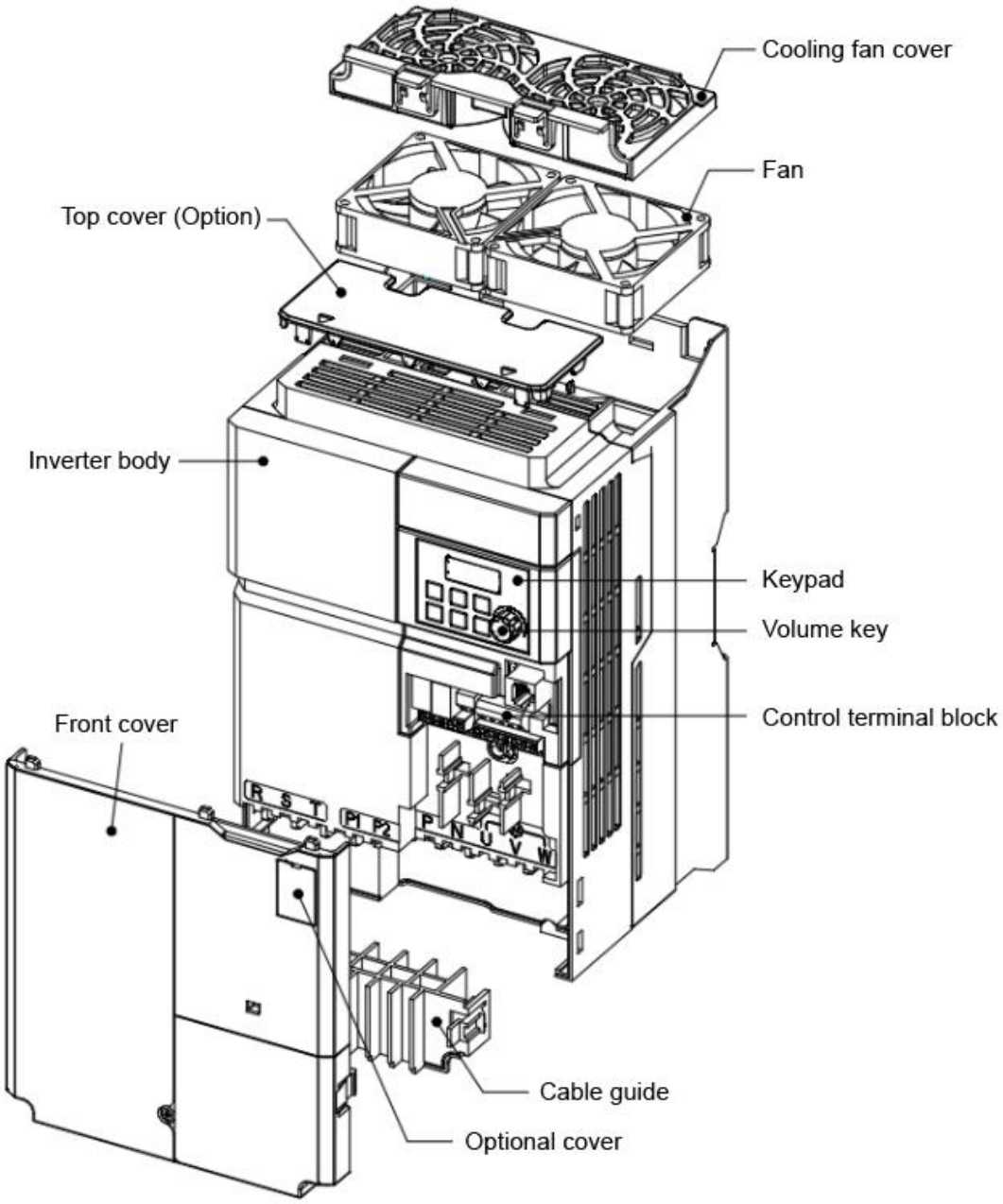
Cooling fan cover
Fan
Top cover (Option)
Inverter body
Keypad
Volume key
Control terminal block
Front cover
R S T
P1 P2
P N
U V W
Cable guide
Optional cover

1.3 Installation Considerations

Inverters are composed of various precision, electronic devices, and therefore the installation environment can significantly impact the lifespan and reliability of the product. The table below details the ideal operation and installation conditions for the inverter.

Items	Description
Ambient temperature*	Heavy load: -10–50℃, Normal load: -10–40℃
Ambient humidity	Less than 95% relative humidity (no condensation)
Storage temperature	-20–65°C
Environmental factors	An environment free from corrosive or flammable gases, oil residue, or dust
Operation altitude/ oscillation	Lower than 3,280 ft (1,000 m) above sea level, less than 1G (9.8 m/sec^2) (Apply derating of 1% at a time on voltage/output current for every 100 m increase starting from 1,000 m, going up to a maximum of 4,000m)
Air Pressure	70–106 kPa

* The ambient temperature is the temperature measured at a point 2” (5 cm) from the surface of the inverter.

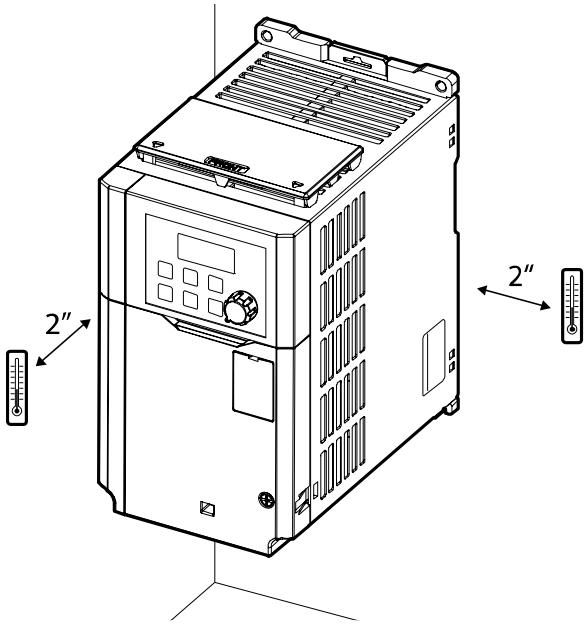

Caution

Do not allow the ambient temperature to exceed the allowable range while operating the inverter.

1.4 Selecting the Installation Site

When selecting an installation location consider the following points:

- The location must be free from vibration, and the inverter must be installed on a wall that can support the inverter's weight.
- The inverter can become very hot during operation. Install the inverter on a surface that is fire-resistant or flame-retardant and with sufficient clearance around the inverter to allow air to circulate.

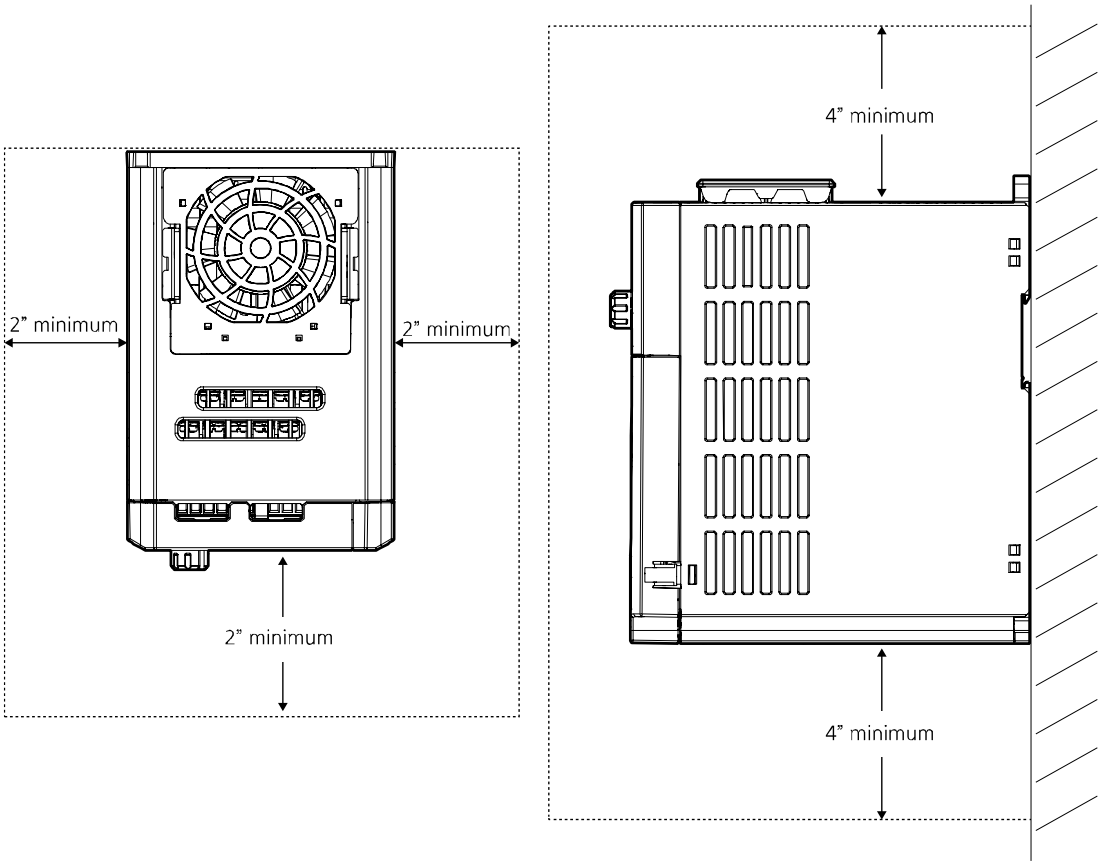

- Make sure that sufficient air circulation is provided around the product. When installing the product inside the panel, carefully consider the position of the product's cooling fan and the ventilation louver. The product must be placed for the cooling fan to discharge heat satisfactorily during the operation.

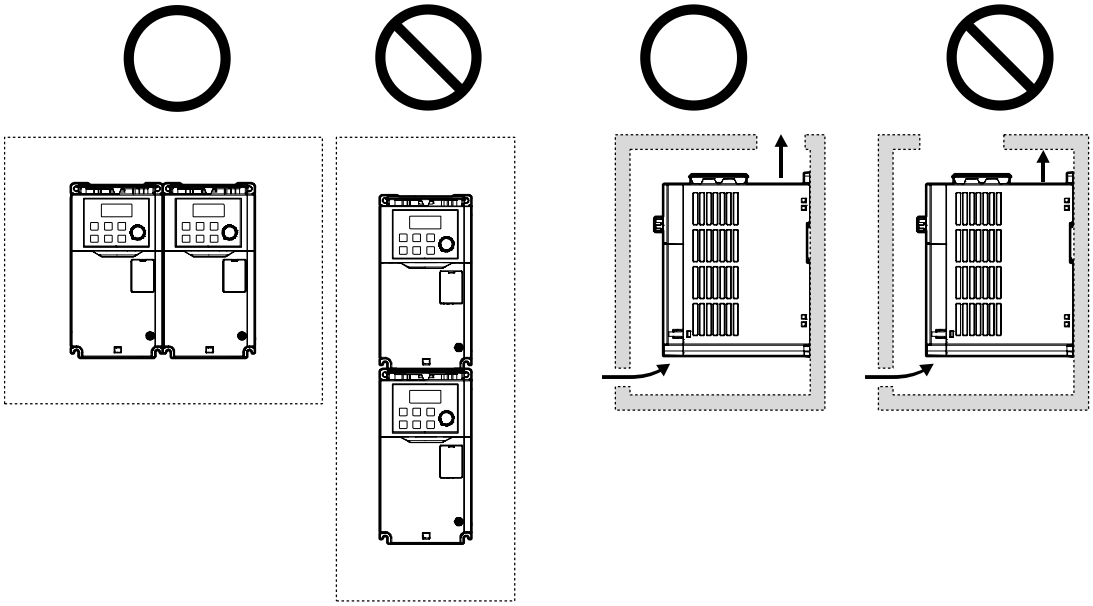

- If you are installing multiple inverters in one location, arrange them side-by-side and remove the top covers. The top covers MUST be removed for side-by-side installations. Use a flat head screwdriver to remove the top covers.

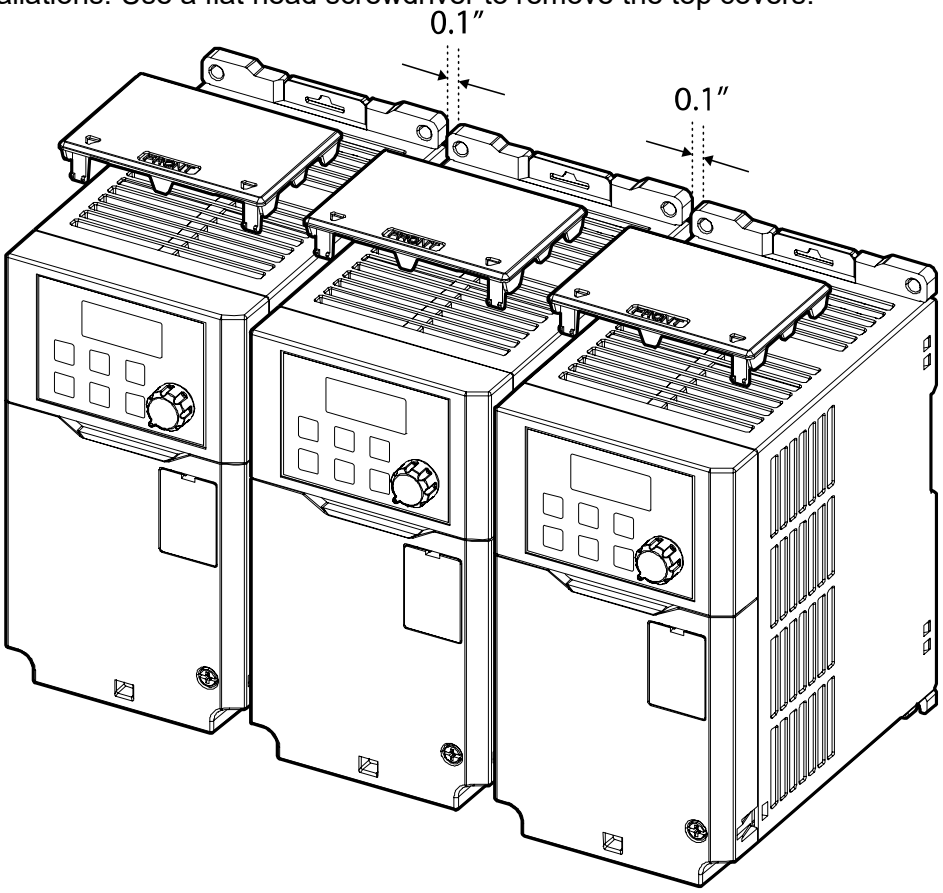

- If you are installing multiple inverters, of different ratings, provide sufficient clearance to meet the clearance specifications of the larger inverter.

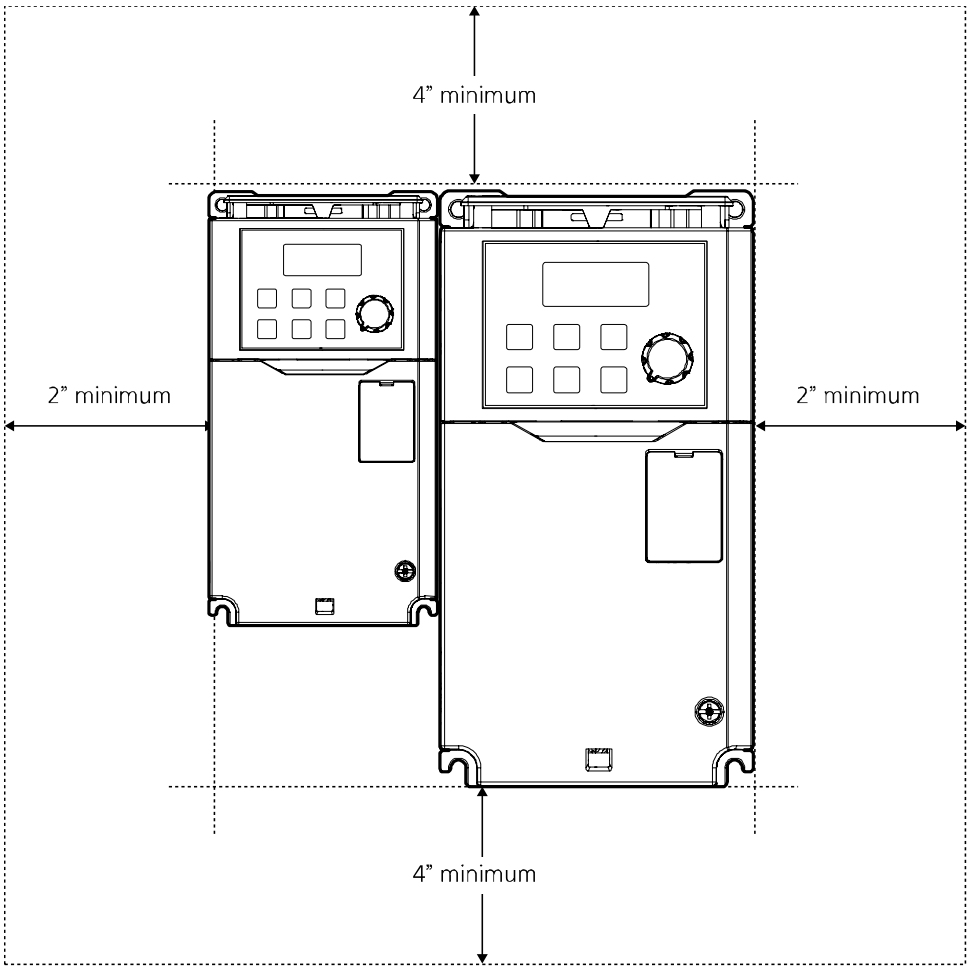

1.5 Cable Selection

When you install power and signal cables in the terminal blocks, only use cables that meet the required specification for the safe and reliable operation of the product. Refer to the following information to assist you with cable selection.

Caution

- Wherever possible use cables with the largest cross-sectional area for mains power wiring, to ensure that voltage drop does not exceed 2%.
- Use copper cables rated for 600 V, 75℃ for power terminal wiring.
- Use copper cables rated for 300 V, 75℃ for control terminal wiring.

Ground Cable and Power Cable Specification

Capacity(kW)		Ground		Power Terminal Wiring				Terminal Block Size
		mm^2	AWG	mm^2		AWG		
				R/S/T	U/V/W	R/S/T	U/V/W	
3-Phase 200V	0.4	4	12	2.5	2.5	14	14	M3(M3.5*)
	0.75	4	12	2.5	2.5	14	14	M3(M3.5*)
	1.5	4	12	2.5	2.5	14	14	M4(M3.5*)
	2.2	4	12	2.5	2.5	14	14	M4(M3.5*)
	4	4	12	4	4	12	12	M4
	5.5	6	10	6	6	10	10	M4
	7.5	6	10	10	10	8	8	M4
	11	16	6	16	16	6	6	M5
	15	16	6	25	25	4	4	M5
	18.5	25	4	35	35	2	2	M6
	22	25	4	35	35	2	2	M6
3-Phase 400V	0.4	2.5	14	2.5	2.5	14	14	M3.5
	0.75	2.5	14	2.5	2.5	14	14	M3.5
	1.5	2.5	14	2.5	2.5	14	14	M3.5
	2.2	2.5	14	2.5	2.5	14	14	M3.5
	4	2.5	14	2.5	2.5	14	14	M4
	5.5	4	12	4	2.5	12	14	M4
	7.5	4	12	4	4	12	12	M4
	11	10	8	6	6	10	10	M5
	15	10	8	16	10	6	8	M5
	18.5	16	6	16	10	6	8	M5
	22	16	6	25	16	4	6	M5

* G100C

Signal (Control) Cable Specifications

Terminals	Control Terminal Wiring			
	Without Crimp Terminal Connectors		With Crimp Terminal Connectors	
	mm^2	AWG	mm^2	AWG
24, P1~P6, CM, SA/SB/SC	0.8	18	0.5	20
P7, P8, AO, IO, VR, V1, I2(PTC), V2, CM, S+/S-				
A1/B1/C1, A2/C2/ Q1/EG*				

*G100C series models support Q1/EG open collector output terminal as a substitute for A2/C2 relay terminal 2.

2 Installing the Inverter

This chapter describes the physical and electrical installation methods, including mounting and wiring of the product. Refer to the flowchart and basic configuration diagram provided below to understand the procedures and installation methods to be followed to install the product correctly.

Installation Flowchart

The flowchart lists the sequence to be followed during installation. Install the product following the flowchart and check the operation status. For more information on each step, refer to the pages below.

Product Identification (**p.1** Ref.)

↓

Select the Installation Location (**p.7** Ref.)

↓

Mounting the Inverter (**p.17** Ref.)

↓

Wiring the Ground Connection (**p.24** Ref.)

↓

Power and Signal Wiring (**p.27** Ref.)

↓

Post-Installation Checks (**p.47** Ref.)

↓

Turning on the Inverter

↓

Parameter Configuration (**p.58** Ref.)

↓

Testing (**p.49** Ref.)

Basic Configuration

The diagram below shows the basic system configuration. Use the diagram for reference when configuring the system by connecting the product with peripheral devices. Ensure that the product has a suitable rating for the configuration and that all the required peripherals and optional devices (brake unit, reactors, noise filters, etc.) are available. For more details on peripheral devices, see to **11.4 Peripheral Devices** on page **378**.

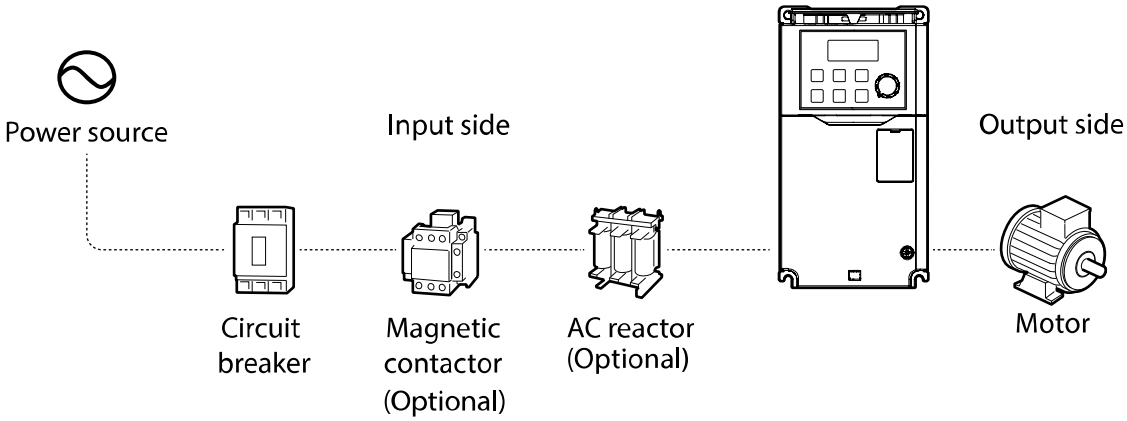

Caution

- Note that the illustration on this user manual may represent the product with the cover open or the circuit breaker removed for explanation. When operating the inverter, make sure to follow the instructions of user manual after fully installing the necessary parts, such as the cover and circuit breaker.
- Do not start or stop the inverter with a magnetic contactor. This may cause damage to the inverter.
- If the inverter is damaged and loses control, the machine may cause a dangerous situation. Install an additional safety device such as an emergency brake to prevent these situations.
- High levels of current draw during power-on can affect the system. Ensure that correctly rated circuit breakers are installed to operate safely during power-on situations.
- Reactors can be installed to improve the power factor. Note that reactors may be installed within 30 ft (9.14 m) from the power source if the input power exceeds 10 times of inverter capacity. Refer to **11.5 Fuse and Reactor Specifications** on page **379** and carefully select a reactor that meets the requirements.

2.1 Mount on the Wall or within the Panel

Mount the inverter on a wall or inside a panel following the procedures provided below. Before installation, ensure that there is sufficient space to meet the clearance specifications, and that there are no obstacles impeding the cooling fan's air flow.

Select a wall or panel suitable to support the installation. Refer to **11.3 External dimensions** on page **367** and check the inverter's mounting bracket dimensions.

1 Use a level to draw a horizontal line on the mounting surface, and then carefully mark the fixing points.

2 Drill the two upper mounting bolt holes, and then install the mounting bolts. Do not fully tighten the bolts at this time. Fully tighten the mounting bolts after the inverter has been mounted.

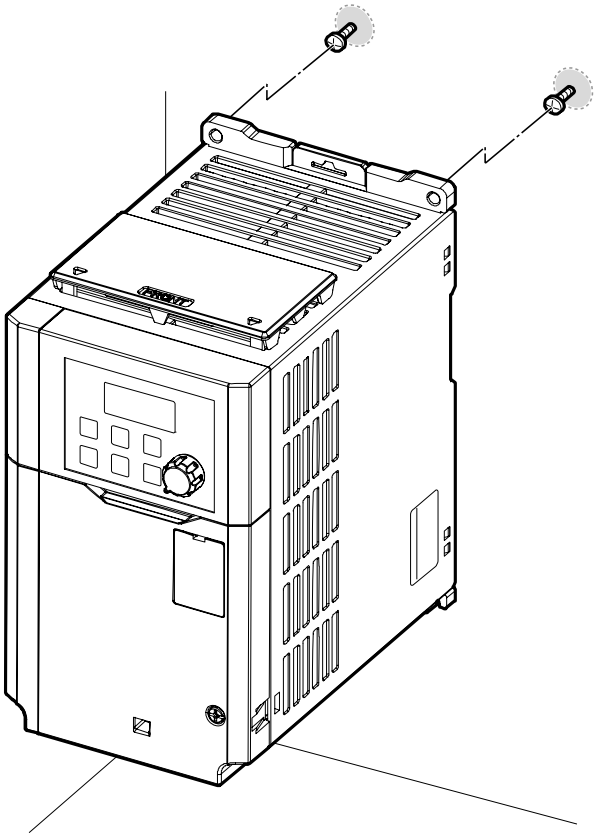

3 Mount the inverter on a wall or inside a panel using two mounting bolts. Fully tighten the upper mounting bolts, then install two lower mounting bolts and tighten fully to mount the inverter. Ensure that the inverter is placed flat on the mounting surface, and that the installation surface can securely support the weight of the inverter.

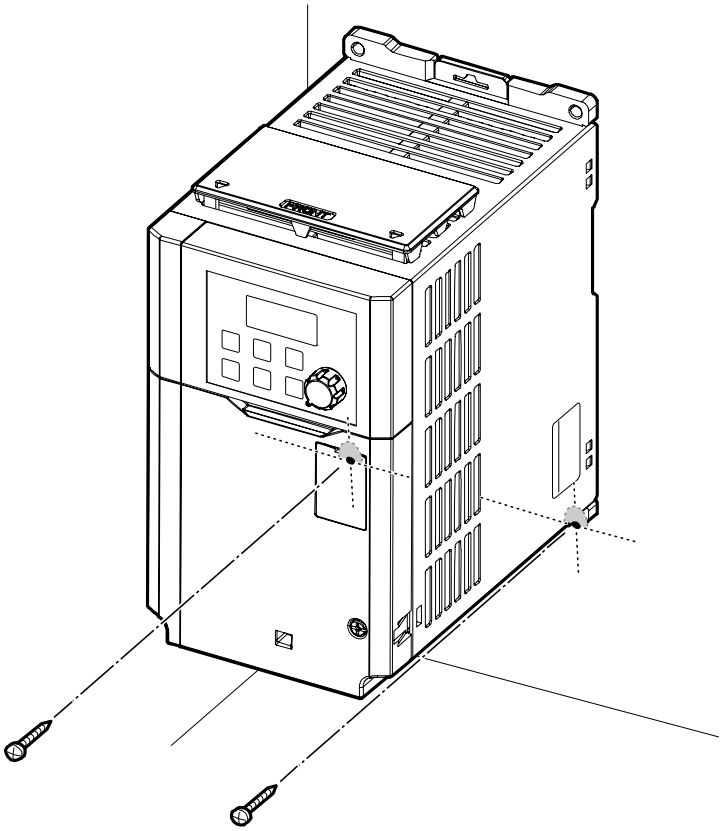

Note

The quantity and dimensions of the mounting brackets vary based on the frame size. Refer to **11.3 External dimensions** on page **367** for detailed information about your model.

Caution

- Do not transport the inverter by lifting with the inverter's covers or plastic surfaces. The inverter may tip over if covers break, causing injuries or damage to the product. Always support the inverter using the metal frames when moving it.
- Use a transport method that is suitable for the weight of the product. Some high capacity inverters can be too heavy for one person to carry. Use an adequate number of people and transport tool to safely move the product.
- Do not install the inverter on the floor or mount it sideways against a wall. The inverter must be installed vertically, on a wall or inside a panel, with its rear flat on the mounting surface.

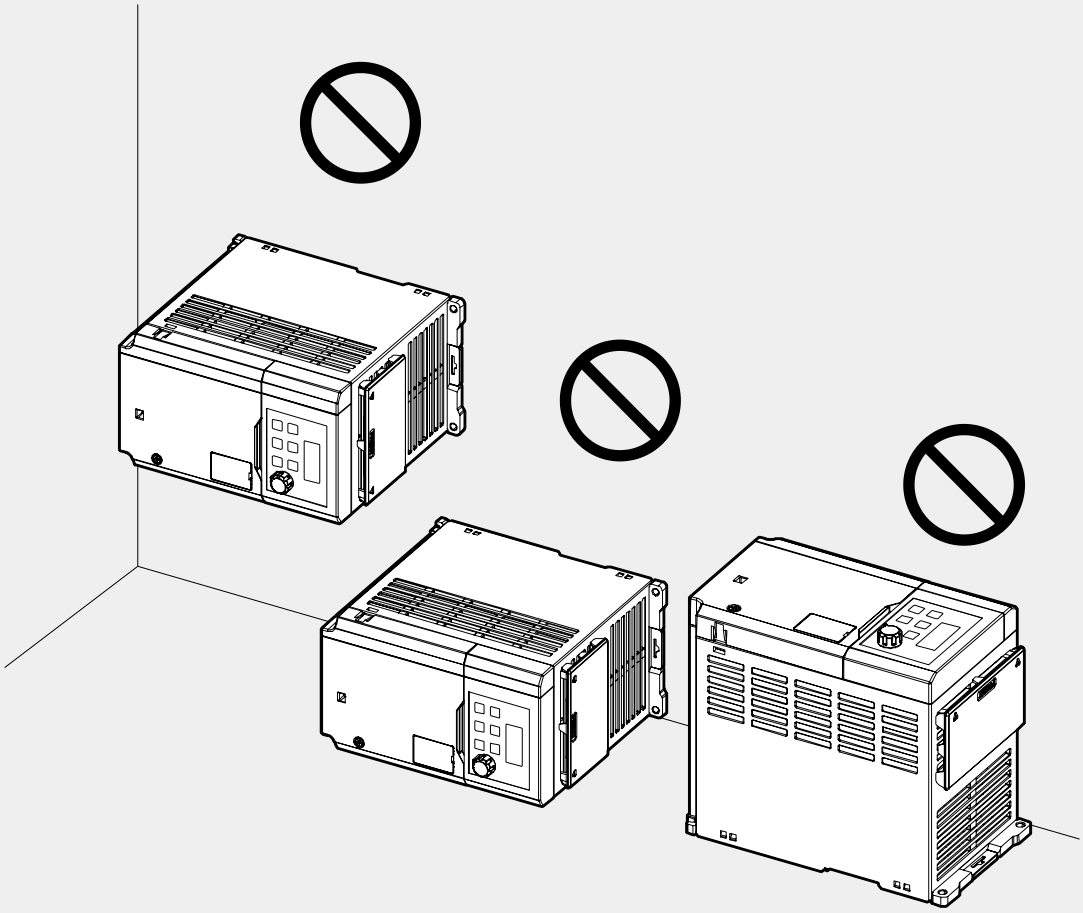

2.2 Wiring

Open the front cover, remove the cable guides and control terminal cover, and then install the ground connection as specified. Complete the cable connections by connecting an appropriately rated cable to the terminals on the power and control terminal blocks. Read the following information carefully before carrying out wiring connections to the inverter. All warning instructions must be followed.

Caution

- Install the inverter before carrying out wiring connections.
- Ensure that no small metal debris, such as wire cut-offs, remain inside the inverter. Metal debris in the inverter may cause inverter failure.
  Tighten terminal screws to their specified torque. Loose terminal block screws may allow the cables to disconnect and cause short circuit or inverter failure. Refer to **11.6 Terminal Screw Specification** on page **381** for torque specifications.
- Do not place heavy objects on top of electric cables. Heavy objects may damage the cable and result in electric shock.
- The power supply system for this equipment (inverter) is a grounded system(TT, TN).The inverter is not suitable for corner-earthed systems.
- The equipment may generate direct current in the protective ground wire. When installing the residual current device (RCD) or residual current monitoring (RCM), only Type B RCDs and RCMs can be used.
- Use cables with the largest cross-sectional area, appropriate for power terminal wiring, to ensure that voltage drop does not exceed 2%.
- Use copper cables rated at 600 V, 75℃ for power terminal wiring.
- Use copper cables rated at 300 V, 75℃ for control terminal wiring.
- Separate control circuit wires from the main circuits and other high voltage circuits (200 V relay sequence circuit).
- Check for short circuits or wiring failure in the control circuit. They could cause system failure or device malfunction.
- Use shielded cables for control terminal wiring. Failure to do so may cause malfunction due to interference. When grounding is needed, use shielded twisted pair (STP) cables.
- If you need to re-wire the terminals due to wiring-related faults, ensure that the inverter keypad display is turned off and the charge lamp under the front cover is off before working on wiring connections. The inverter may hold a high voltage electric charge long after the power supply has been turned off.

Step1 Remove the front cover

For the power terminal and control terminal wiring, the front cover must be disassembled in order. Note that the disassembling procedure of front cover and control terminal cover may vary depending on the product group. Disassemble each cover in the following order:

0.4~7.5 kW

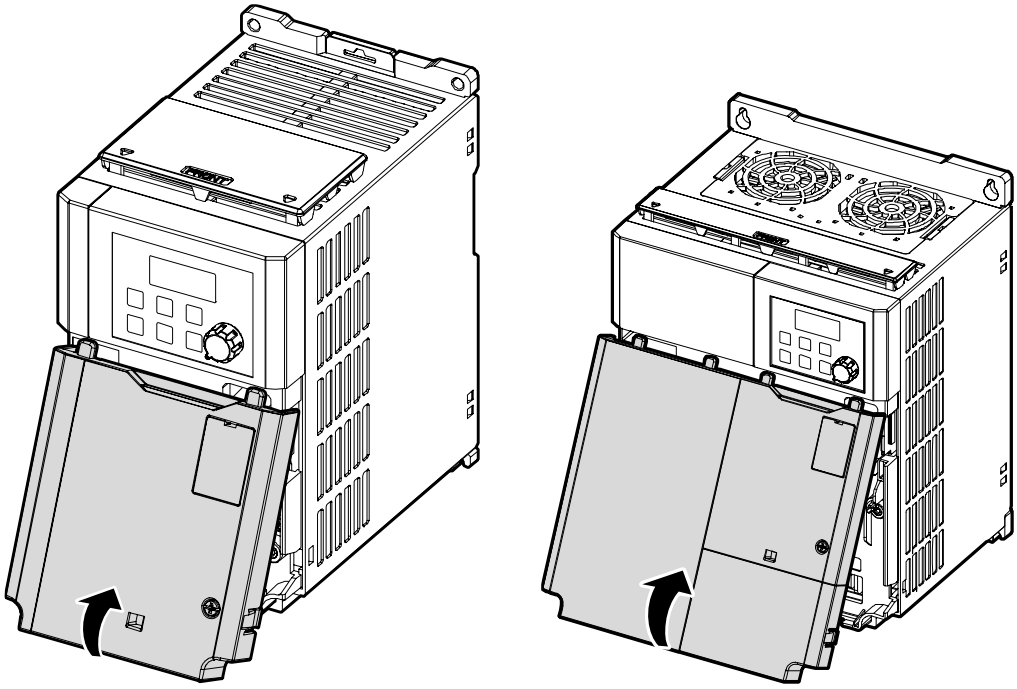

0.4~4.0kW(G100C)

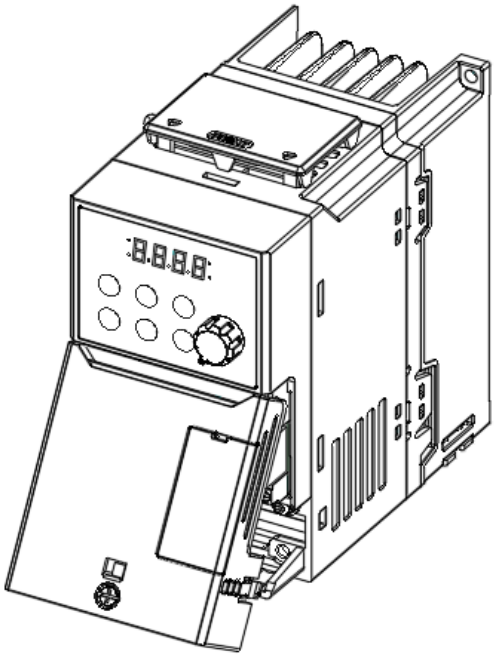

Loosen the bolt that secures the front cover (R). Push and hold the latch on the right side of the cover. Then remove the cover by lifting it from the bottom and moving it away from the front of the inverter.

11~22 kW

1 Loosen the bolt that secures the front cover, and then pull the cover outward to remove it.

2 Loosen the hook (or bolt) that secures the cable rack, and then pull the rack outward to remove it.

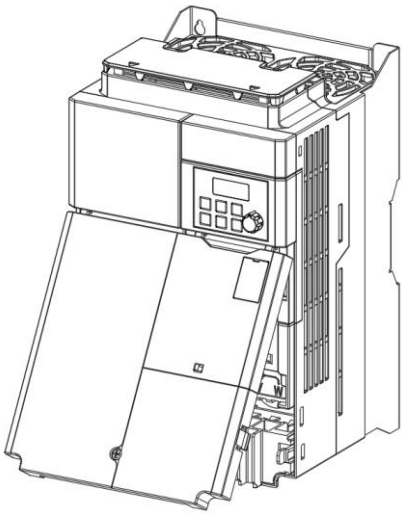

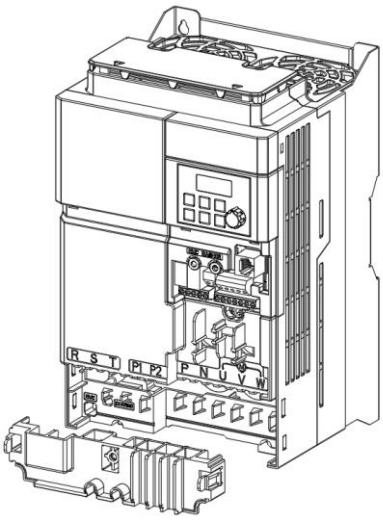

Note

If you have installed the remote keypad, remove the plastic cover under the lower-right part of the control terminal cover, and then connect the remote keypad signal to the RJ-45 connector.

Step2 Ground Connection

Remove the front cover(s) and the control terminal cover. Then follow the instructions below to install the ground connection for the inverter.

1 Locate the ground terminal and connect an appropriately rated ground cable to the terminals. Refer to **1.5 Cable Selection** on page **12** to find the appropriate cable specification for your installation.

0.4~7.5 kW

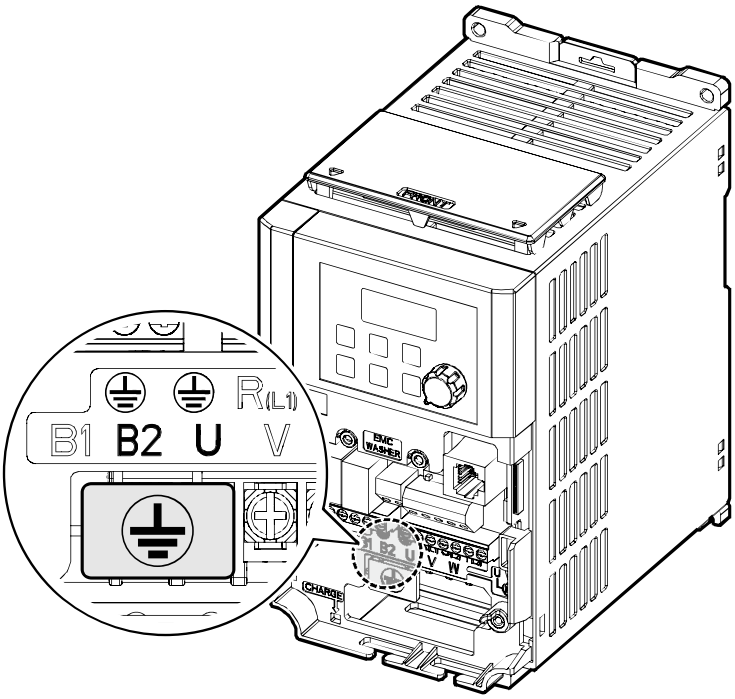

0.4~4.0kW (G100C)

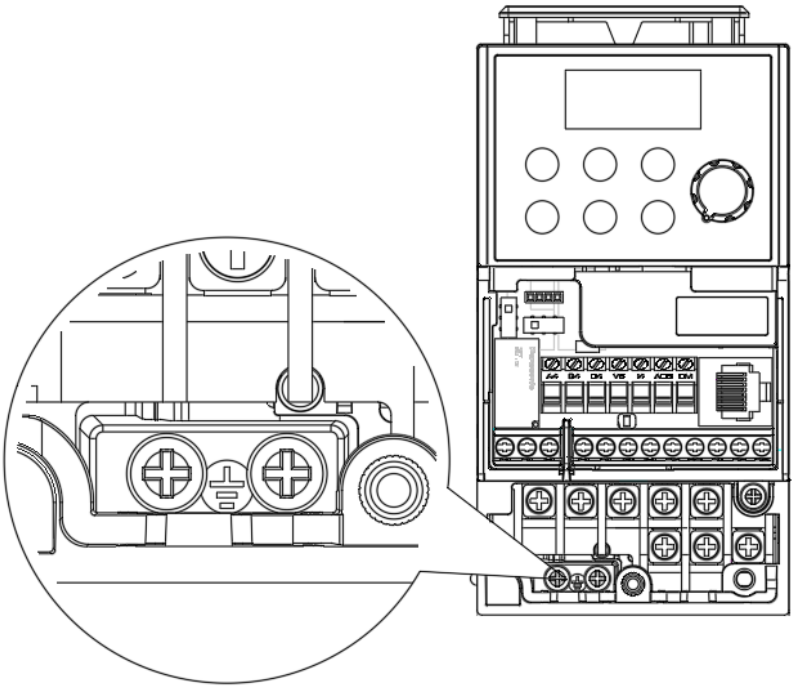

11~22 kW

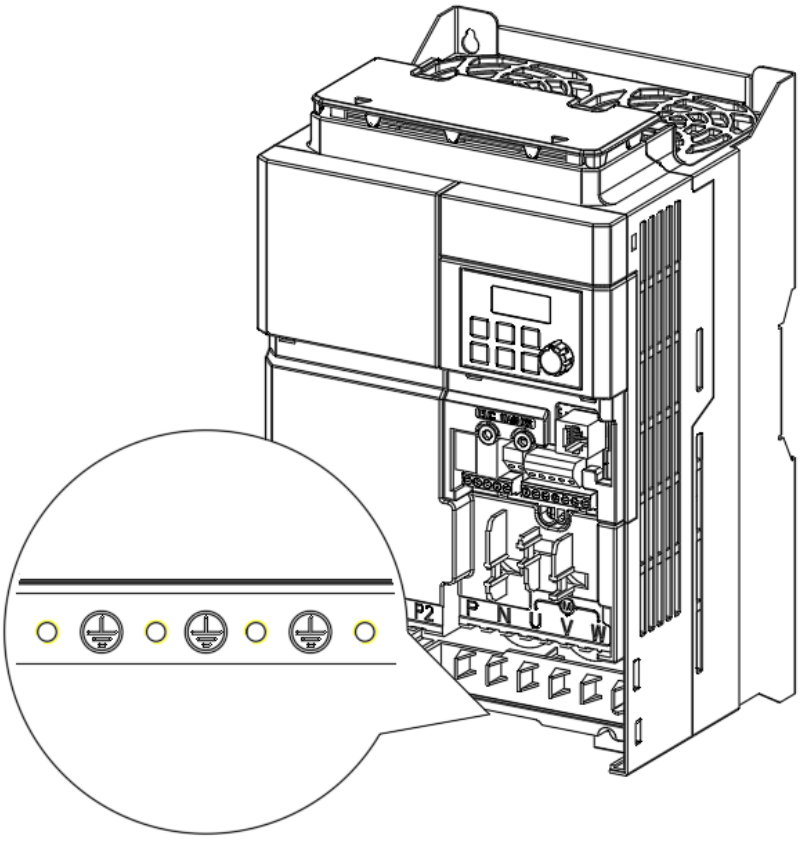

2 Connect the other ends of the ground cables to the supply earth (ground) terminal.

Note

- 200 V products require Class 3 grounding. Resistance to ground must be < 100Ω.
- 400 V products require Special Class 3 grounding. Resistance to ground must be less than < 10 Ω.

⚠ Warning

Make sure to install ground connection between the equipment and the motor for safe use. Otherwise it may cause an electrical shock and result in personal injury or even death.

Step3 Power Terminal Wiring

The following illustration shows the terminal layout on the power terminal block. Refer to the detailed descriptions to understand the function and location of each terminal before making wiring connections. Ensure that the cables selected meet or exceed the specifications in **1.5 Cable Selection** on page **12** before installing them.

Caution

- Apply rated torques to the terminal screws. Loose screws may cause short circuits and malfunctions. Tightening the screw too much may damage the terminals and cause short circuits and malfunctions.
- Use copper wires only with 600 V, 75℃ rating for the power terminal wiring, and 300 V, 75℃ rating for the control terminal wiring.
- Do not connect two wires to one terminal when wiring the power.
- Power supply wirings must be connected to the R, S, and T terminals. Connecting them to the U, V, W terminals causes internal damages to the inverter. Motor should be connected to the U, V, and W Terminals. Arrangement of the phase sequence is not necessary.

Attention

- Appliquer des couples de marche aux vis des bornes. Des vis desserrées peuvent provoquer des courts-circuits et des dysfonctionnements. Ne pas trop serrer la vis, car cela risqué d'endommager les bornes et de provoquer des courts-circuits et des dysfonctionnements. Utiliser uniquement des fils de cuivre avec une valeur nominale de 600 V, 75℃ pour le câblage de la borne d'alimentation, et une valeur nominale de 300 V, 75℃ pour le câblage de la borne de commande.
- Ne jamais connecter deux câbles à une borne lors du câblage de l'alimentation.
- Les câblages de l'alimentation électrique doivent être connectés aux bornes R, S et T. Leur connexion aux bornes U, V et W provoque des dommages internes à l'onduleur. Le moteur doit être raccordé aux bornes U, V et W. L'arrangement de l'ordre de phase n'est pas nécessaire.

0.4~0.8 kW (G100C)

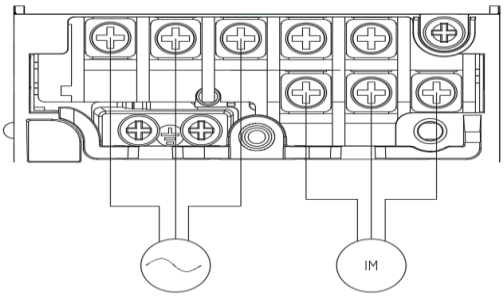

1.5/2.2 kW (G100C)

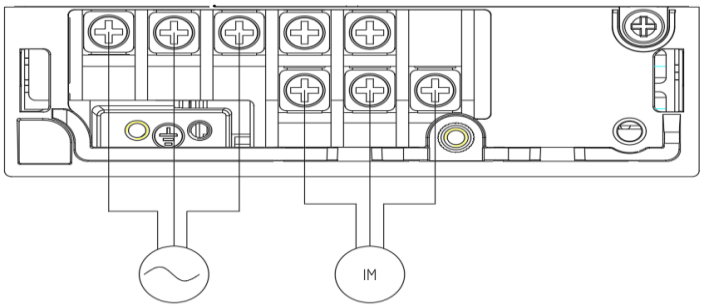

4.0kW (G100C)

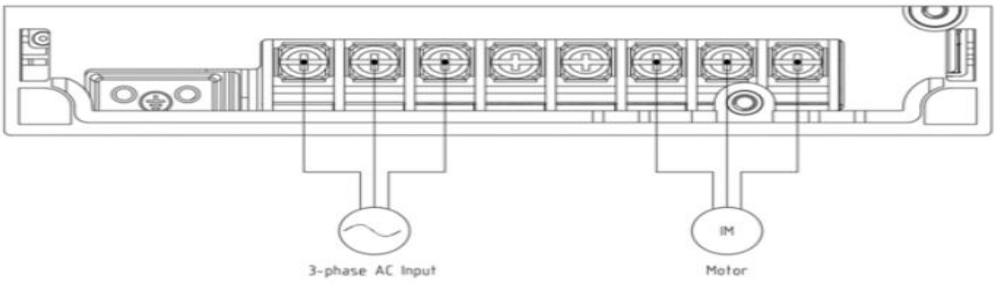

0.4~0.8 kW

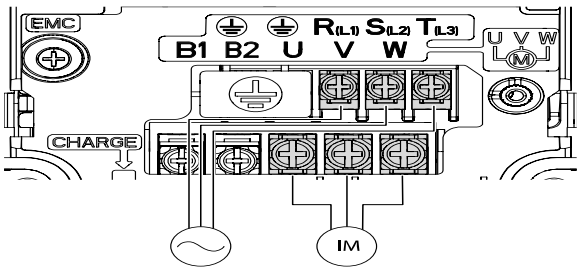

1.5~2.2 kW

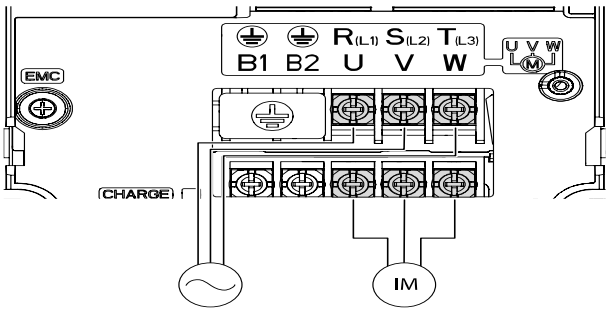

4.0 kW

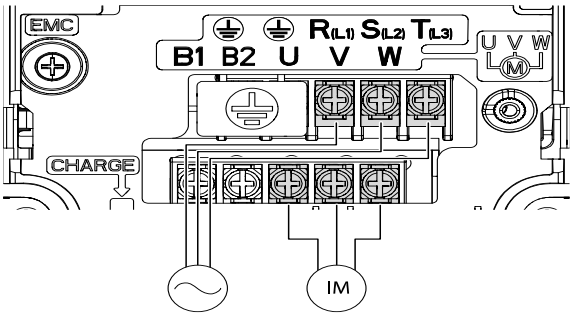

5.5~7.5 kW

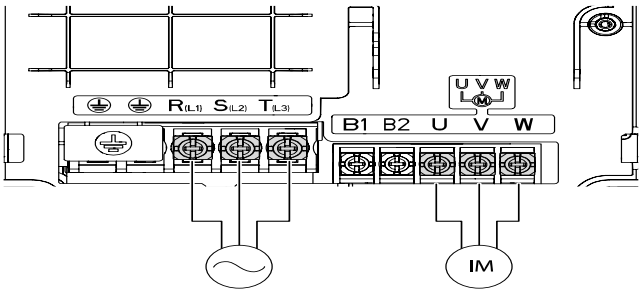

11~15 kW-4 / 11 kW-2

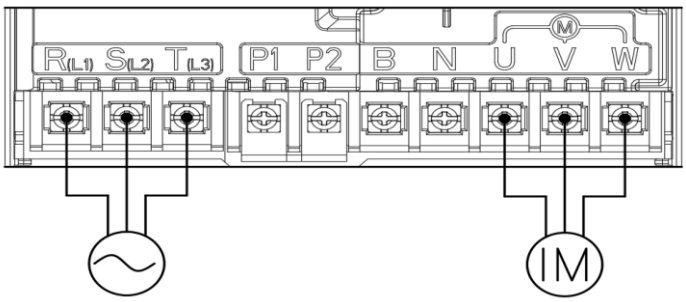

18.5~22 kW-4 / 15 kW-2

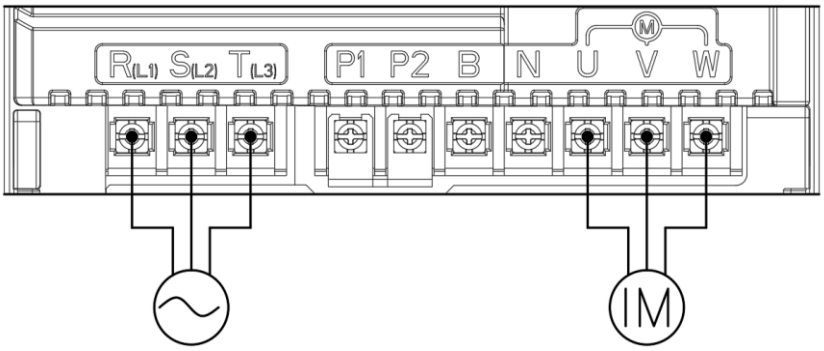

18.5~22 kW-2

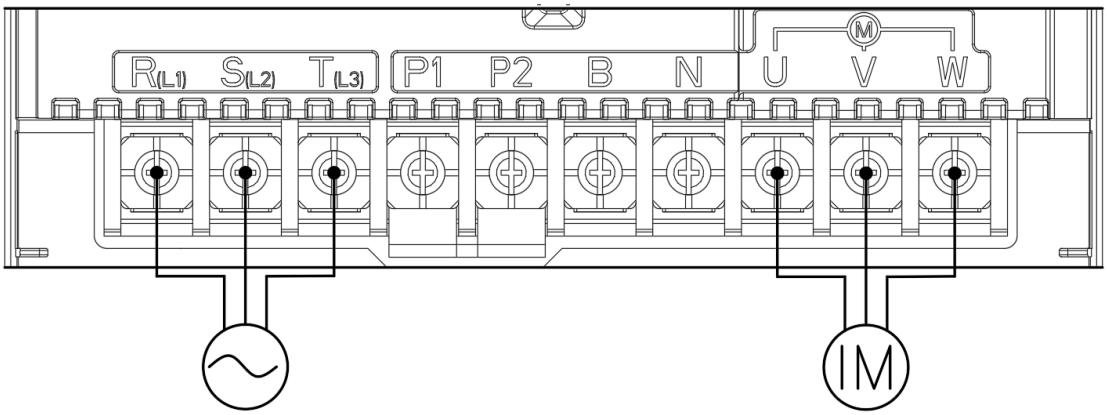

Power Terminal Labels and Descriptions

Terminal Labels	Name	Description
⏚	Ground Terminal	Connect earth grounding.
R(L1)/S(L2)/T(L3)	AC power input terminal	Mains supply AC power connections.
P2/N(11~22kW)	DC link terminal	DC voltage terminals.
P1/P2(11~22kW)	DC reactor terminal	Connects the DC reactor. (Remove the short-circuiting bar when connecting the DC reactor.)
B1/B2(0.4~7.5kW) P2/B(11~22kW)	Braking resistor terminals	Braking resistor wiring connection.
U/V/W	Motor output terminals	3-phase induction motor wiring connections.

Note

- Do not use 3 core cables to connect a remotely located motor with the inverter.
- When operating Braking resistor, the motor may vibrate under the Flux braking operation. In this case, please turn off the Flux braking (Pr.50).
- Make sure that the total cable length does not exceed 665 ft (202 m). For inverters < = 4.0 kW capacity, ensure that the total cable length does not exceed 165 ft (50 m).
- Long cable runs can cause reduced motor torque in low frequency applications due to voltage drop. Long cable runs also increase a circuit's susceptibility to stray capacitance and may trigger over-current protection devices or result in malfunction of equipment connected to the inverter. Voltage drop is calculated by using the following formula:

  Voltage Drop (V) = [$\sqrt{3}$ X cable resistance (mΩ/m) X cable length (m) X current (A)] / 1000
- Use cables with the largest possible cross-sectional area to ensure that voltage drop is minimized over long cable runs. Lowering the carrier frequency and installing a micro surge filter may also help to reduce voltage drop.

Distance	< 330 ft (50 m)	< 330 ft (100 m)	> 330 ft (100 m)
Allowed Carrier Frequency	< 15 kHz	< 5 kHz	< 2.5 kHz

⚠ Warning

Do not connect power to the inverter until installation has been fully completed and the inverter is ready to be operated. Otherwise, it may cause an electrical shock and result in personal injury or even death.

ⓘ Caution

- Power supply cables must be connected to the R, S, and T terminals and output wiring to the motor must be connected to the U, V, and W terminals. Opposite connections may damage the product.
- Use insulated ring lugs when connecting cables to R/S/T and U/V/W terminals.
- The inverter's power terminal connections can cause harmonics that may interfere with other communication devices located near to the inverter. To reduce interference the installation of noise filters or line filters may be required.
- Are advanced-phase capacitors, surge protection and electromagnetic interference filters installed correctly?
- To avoid circuit interruption or damaging connected equipment, do not install magnetic contactors on the output side of the inverter (motor side). Metal debris in the inverter may cause inverter failure.

Step 4 Control Terminal Wiring

The illustrations below show the detailed layout of control wiring terminals, and control board switches. Ensure that the cables selected meet or exceed the specifications in **1.5 Cable Selection** on page **12** before installing them.

0.4~4.0kW (G100C)

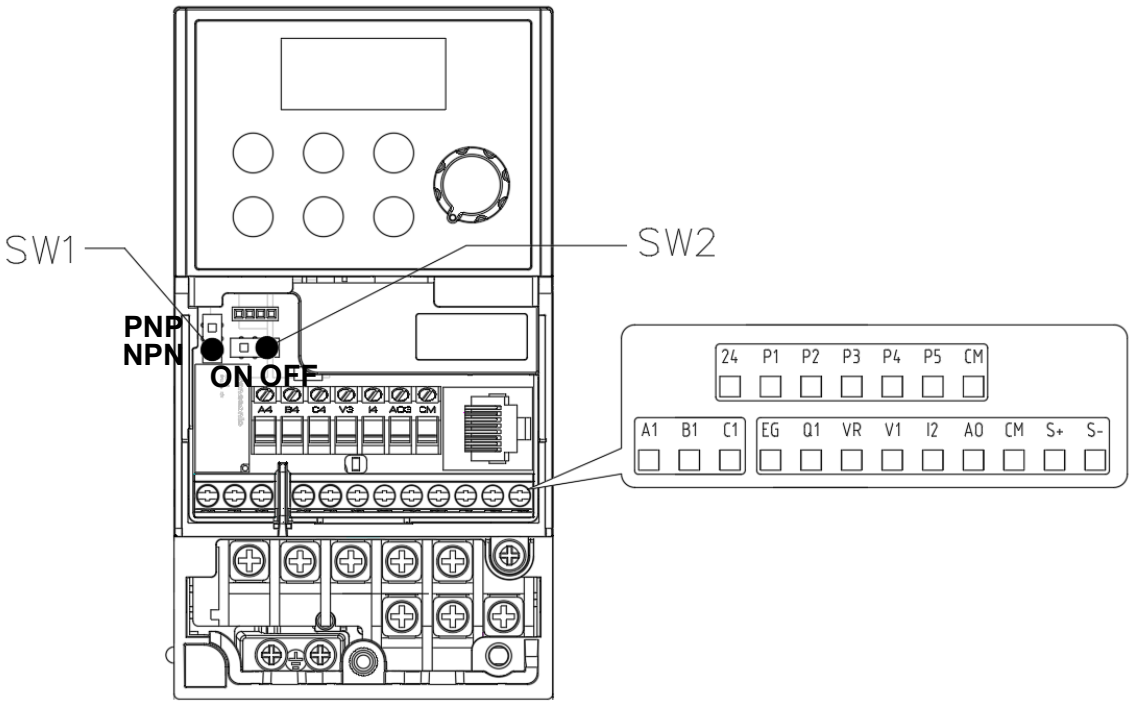

0.4~22.0 kW

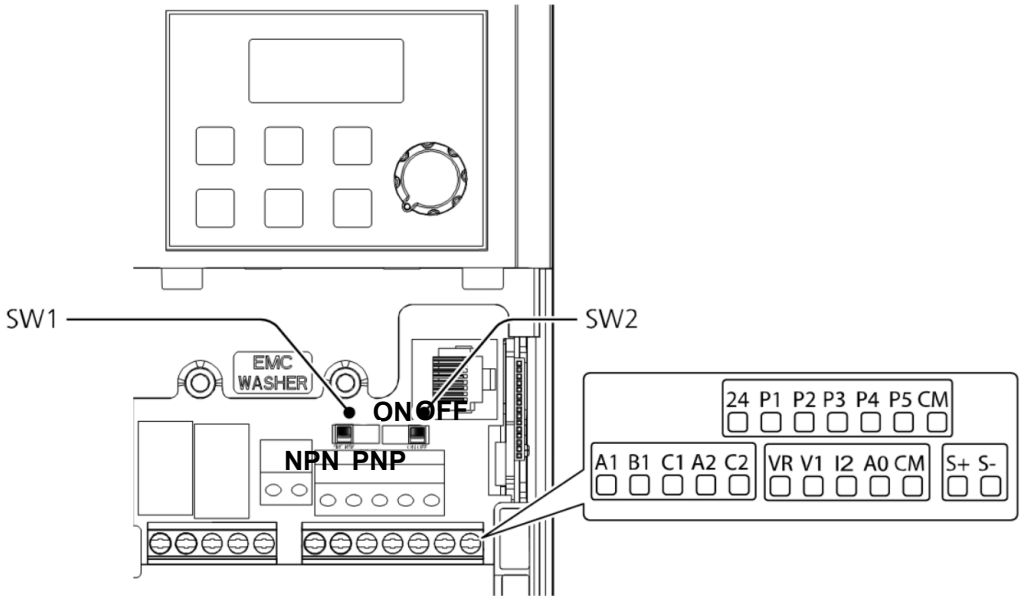

0.4~22.0 kW(G100 STO)

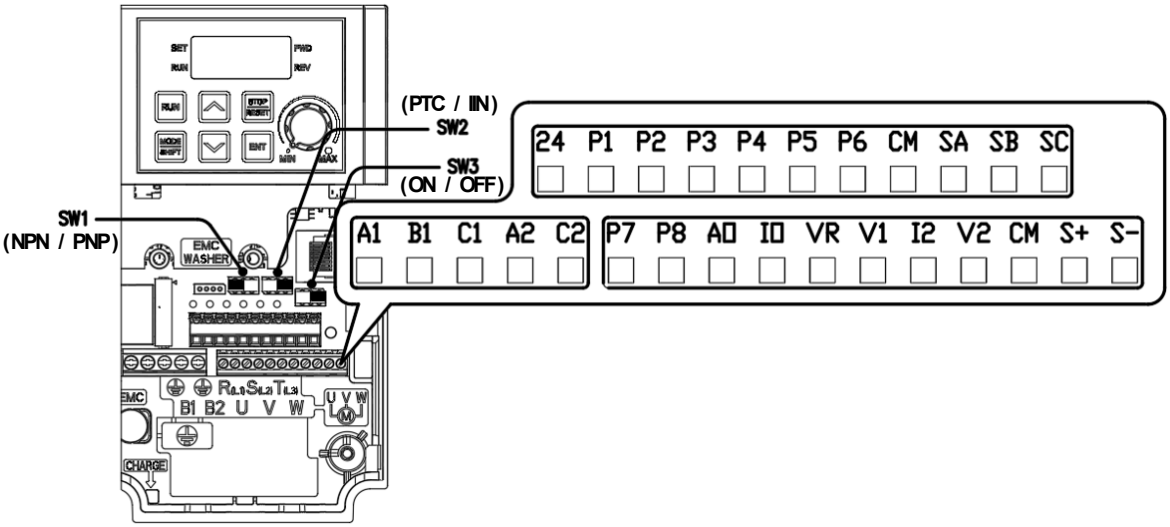

* The factory default settings for switches SW1 to SW3 are indicated by the black direction.

Control Board Switches

Switch	Description
SW1	NPN/PNP mode selection switch
SW2	Terminating Resistor selection switch
SW3 (Safety Type)	I2/PTC selection switch

Connector

Name	Description
RJ-45 Connector	Connect to Remote I/O or smart copier, connect with RS-485 communication.

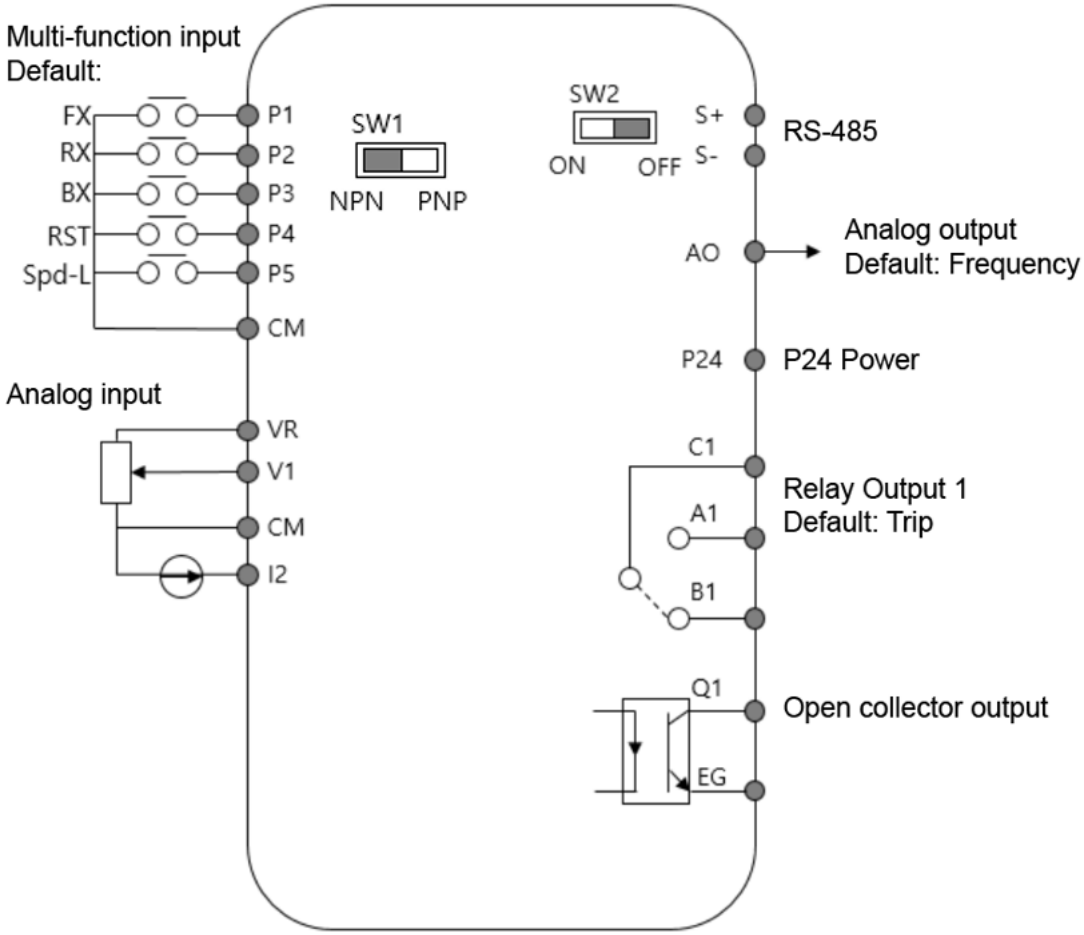
Multi-function input
Default:
FX
RX
BX
RST
Spd-L
P1
P2
P3
P4
P5
CM
SW1
NPN
PNP
SW2
ON
OFF
S+
S-
RS-485
AO
Analog output
Default: Frequency
P24
P24 Power
Analog input
VR
V1
CM
I2
C1
A1
B1
Relay Output 1
Default: Trip
Q1
EG
Open collector output

<G100C>

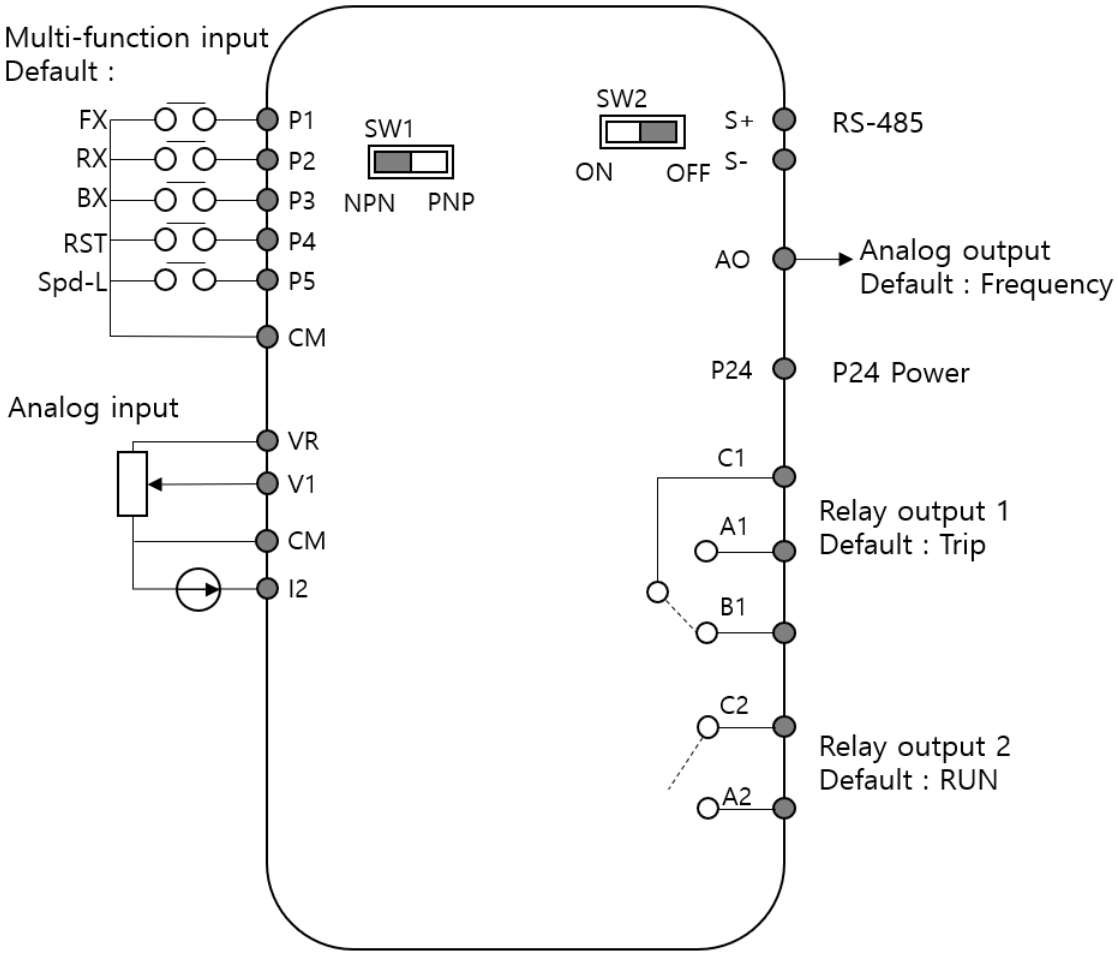
Multi-function input
Default :
FX
RX
BX
RST
Spd-L
P1
P2
P3
P4
P5
CM
SW1
NPN
PNP
SW2
ON
OFF
S+
S-
RS-485
AO
Analog output
Default : Frequency
P24
P24 Power
Analog input
VR
V1
CM
I2
C1
A1
B1
Relay output 1
Default : Trip
C2
A2
Relay output 2
Default : RUN

<G100>

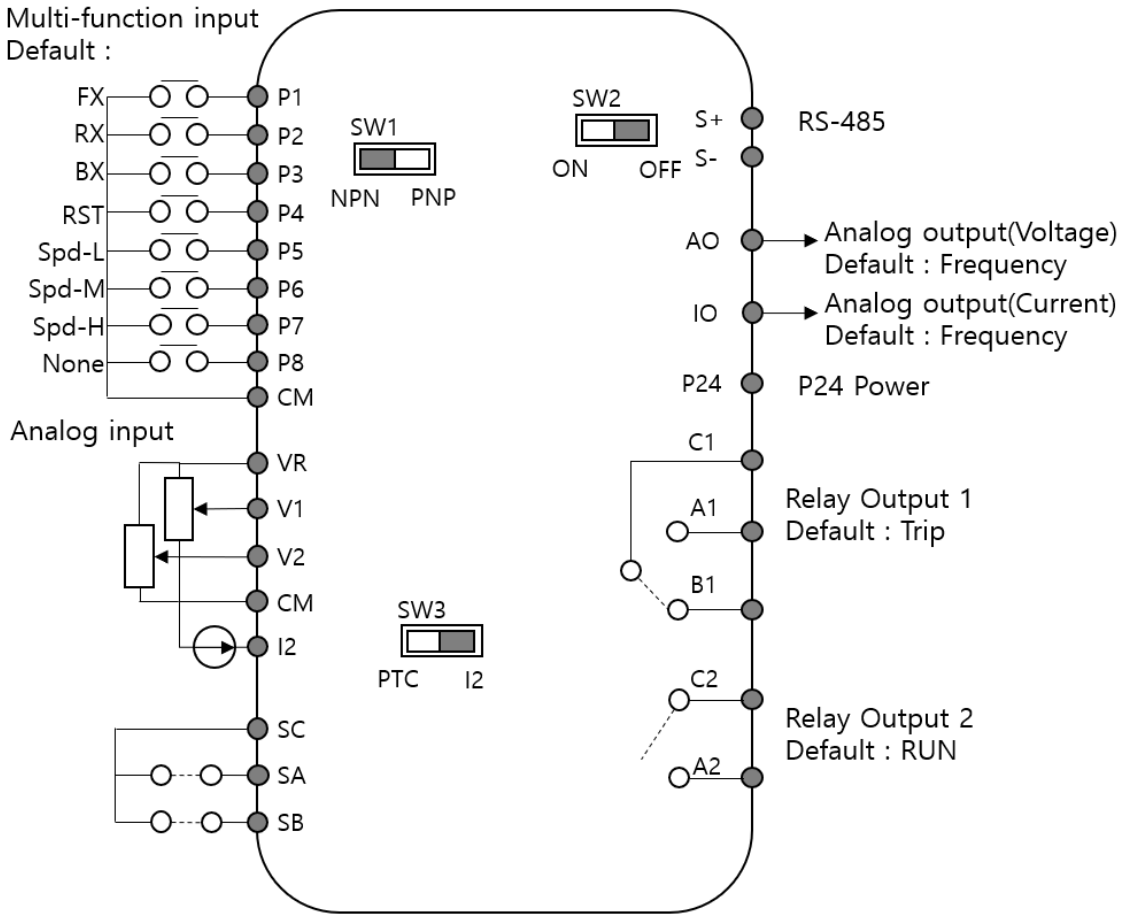
Multi-function input
Default :
FX
RX
BX
RST
Spd-L
Spd-M
Spd-H
None
P1
P2
P3
P4
P5
P6
P7
P8
CM
Analog input
VR
V1
V2
CM
I2
SC
SA
SB
SW1
NPN
PNP
SW2
ON
OFF
SW3
PTC
I2
S+
S-
RS-485
AO
Analog output(Voltage)
Default : Frequency
IO
Analog output(Current)
Default : Frequency
P24
P24 Power
C1
A1
B1
Relay Output 1
Default : Trip
C2
A2
Relay Output 2
Default : RUN

<G100 STO>

Input Terminal Labels and Descriptions

Category	Terminal Labels	Name	Description
Multi-function terminal configuration	P1~P5	Multi-function Input 1-5	Configurable for multi-function input terminals. Factory default terminals and setup are as follows: • P1: FX • P2: RX • P3: BX • P4: RST • P5: Speed-L • P6: Speed-M • P7: Speed-H • P8: None
	P1~P8 (Safety Type)	Multi-function Input 1~8	
	CM	Sequence common terminal	Common terminal for terminal input, RS-485 communication, and analog terminal inputs and outputs.
Analog input	VR	Terminal for frequency reference setting	Used to setup or modify a frequency reference via analog voltage or current input. • Maximum Voltage Output: 12 V • Maximum Current Output: 100 mA (G100C : 20mA) • Potentiometer: 1~5 kΩ
	V1	Frequency setting (voltage) terminal	Used to setup or modify the frequency depending on the voltage input to the V1 terminal. • Unipolar: 0–10 V (12 V Max.) • Bipolar: -10–10 V (±12 V Max.)
	V2 (Safety Type)		
	I2	Current input for frequency reference input Terminal	Used to setup or modify a frequency reference via the I2 terminal. • Input current: 4–20 mA • Maximum Input current: 24mA • Input resistance: 249 Ω
		PTC Input terminal (Safety Type)	It is PTC sensor input terminal. Using PTC, PT 1000 sensor

*For STO IO, SW3 operates as I2 when set to the right and as PTC when set to the left.

Output/Communication Terminal Labels and Descriptions

Category	Terminal Labels	Name	Description
Analog output	AO	Voltage output terminal	Used to send inverter output information to external devices: output frequency, output current, output voltage, or a DC voltage. • Output Voltage: 0–10 V • Max. output voltage/current: 12 V, 10 mA • Factory default output: Frequency
	IO (Safety Type)	Current output terminal	Used to send inverter output information to external devices: output frequency, output current, output voltage, or a DC voltage. • Output Current: 0–20mA • Max. output current: 24 mA • Factory default output: Frequency
Digital Output	24	24V power source	Maximum Current Output: 100 mA
	A1/C1/B1	Fault signal output 1	Sends out alarm signals when the inverter's safety features are activated (AC 250 V <1 A, DC 30 V < 1 A). • Fault condition: A1 and C1 contacts are connected (B1 and C1 open connection) • Normal operation: B1 and C1 contacts are connected (A1 and C1 open connection)
	A2/C2	Fault signal output 2	Sends out alarm signals when the inverter's safety features are activated (AC 250 V <1 A, DC 30 V < 1 A). • Fault condition: A2 and C2 contacts are connected • Normal operation: A2 and C2 contacts are open connection
	Q1/EG (G100C)	Open collector output terminal	G100C series models support Q1/EG open collector output terminal as a substitute for A2/C2 fault signal output terminal 2. Sends out alarm signals when the inverter's safety features block the power output (below DC 24 V, 100 mA).
RS-485 Communication	S+/S-	RS-485 signal input terminal	Used to send or receive RS-485 signals. Refer to **7 RS-485 Communication Features** on page **238** for more details.

*When SA, SB terminals are connected to SC, the maximum output current of terminal 24 is 90mA.

Safety function input terminal symbols and description

Category	Terminal Labels	Name	Description
Safety feature settings	SA	Safety Input Terminal A	In the event of an emergency, block the output based on the incoming input signal from the outside. • When both SA and SB are connected to SC : Normal operation • When either SA or SB is disconnected from the SC : Block product output
	SB	Safety Input Terminal B	
	SC	Safety Input Power Terminal C	Below DC24 V, 10mA

Pre-insulated Crimp Terminal

Use pre-insulated crimp terminal connectors to increase reliability of the control terminal wiring. Refer to the specifications below to determine the crimp terminals to fit various cable sizes.

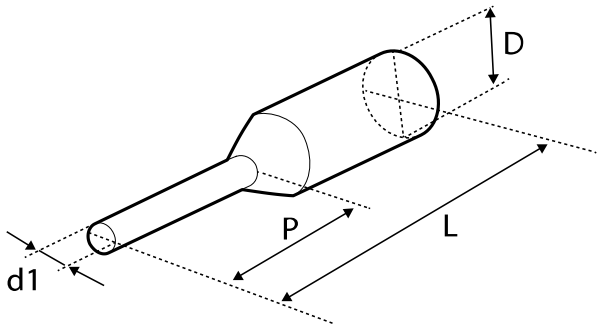

Part Number (P/N)	Cable Spec.		Dimensions (mm)				Manufacturer
	AWG	mm²	L*	P	d1	D	
CE005006	22	0.50	12.0	6.0	1.3	3.2	JEONO (Jeono Electric, http: //www.jeono.com/)
CE007506	20	0.75	12.0	6.0	1.5	3.4	

Part Number	Cable Spec.		Dimensions (mm)				Manufacturer
CE010006	18	1.0	12.0	6.0	1.7	3.6	

* If the length (L) of the crimp terminals exceeds 0.5” (12.7mm) after wiring, the control terminal cover may not close fully.

To connect cables to the control terminals without using crimp terminals, refer to the following illustration detailing the correct length of exposed conductor at the end of the control cable.

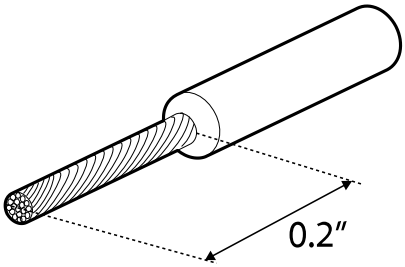

Note

- While making wiring connections at the control terminals, ensure that the total cable length does not exceed 165 ft (50 m).
- Ensure that the length of any safety related wiring does not exceed 100 ft (30m).
- Use ferrite material to protect signal cables from electro-magnetic interference.
- Take care when supporting cables using cable ties, to apply the cable ties no closer than 6 inches from the inverter. This provides sufficient access to fully close the front cover.
- When making control terminal cable connections, use a small flat-tip screw driver (0.1 in wide (2.5 mm) and 0.015 in thick (0.4 mm) at the tip).

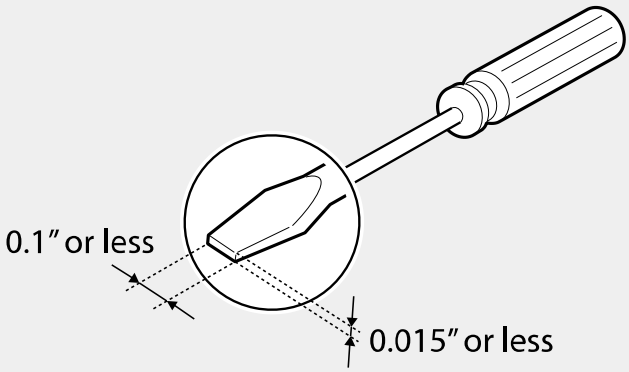

Step 5 PNP/NPN Mode Selection

The G100 inverter supports both PNP (Source) and NPN (Sink) modes for sequence inputs at the terminal. Select an appropriate mode to suit requirements using the PNP/NPN selection switch (SW1) on the control board. Refer to the following information for detailed applications.

PNP Mode (Source)

Select PNP using the PNP/NPN selection switch (SW1). CM is the common ground terminal for all digital inputs at the terminal, and P24 is 24 V internal source. If you are using an external 24 V source, build a circuit that connects the external source (-) and the CM terminal.

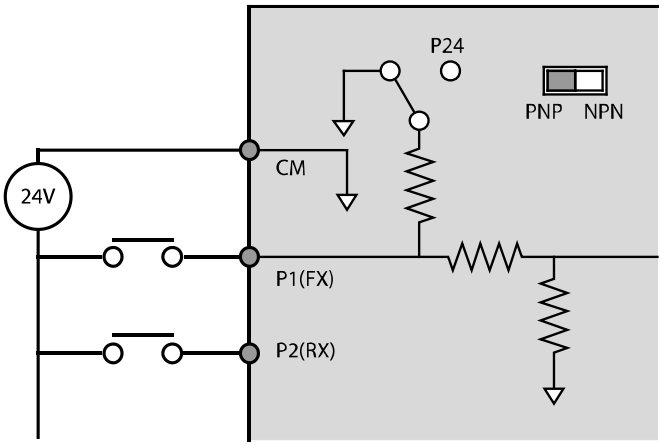

NPN Mode (Sink)

Select NPN using the PNP/NPN selection switch (SW1). CM is the common ground terminal for all digital inputs at the terminal, and P24 is 24 V internal source. Note that the factory default setting is NPN mode.

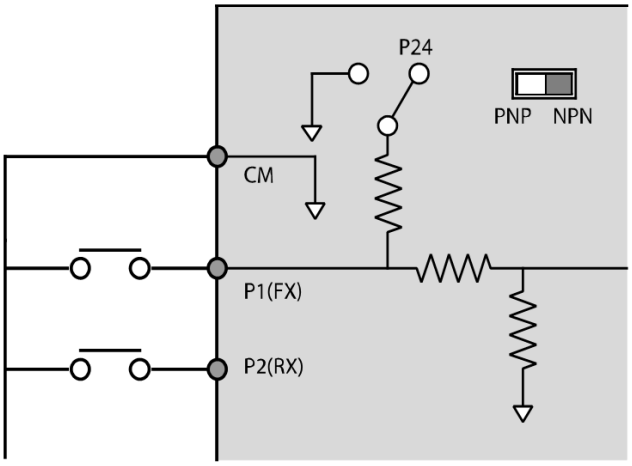

Step 6 Disabling the EMC Filter for Power Sources with Asymmetrical Grounding

Built-in EMC type of G100 400V has an EMC filter which prevents electromagnetic interference by reducing radio emissions from the inverter.

EMC filter features is set to ‘On’ by factory default. Current leakage increases when the EMC filter feature is used.

Asymmetrical Grounding Connection			
One phase of a delta connection is grounded	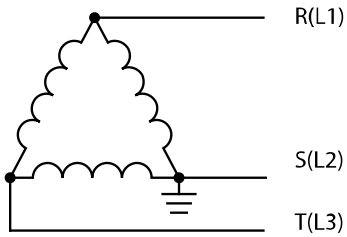	Intermediate grounding point on one phase of a delta connection	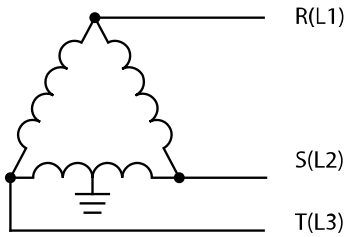
End of a single phase is grounded	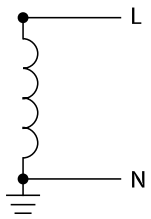	A 3-phase connection without grounding	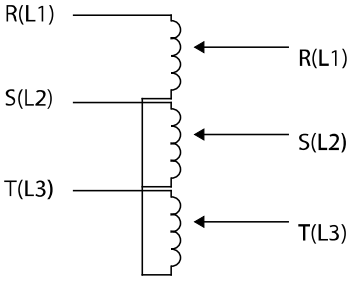

*Please note that G100C series models do not have a built-in EMC filter.

Danger

- Do not activate the EMC filter if the inverter uses a power source with an asymmetrical grounding structure, for example a grounded delta connection. Otherwise it may cause an electrical shock and result in personal injury or even death.
- Before opening the cover to start working, wait at least 10 minutes after the power is disconnected and check that the DC voltage of the product is discharged using a tester. Otherwise, it may cause an electrical shock and result in personal injury or even death.

Before using the inverter, confirm the power supply's grounding system. Disable the EMC filter if the power source has an asymmetrical grounding connection. Check the location of the EMC filter on/off screw and attach the plastic washer to the screw under the control terminal block.

Steel bolt	Steel bolt + Plastic washer
EMC ON	EMC OFF

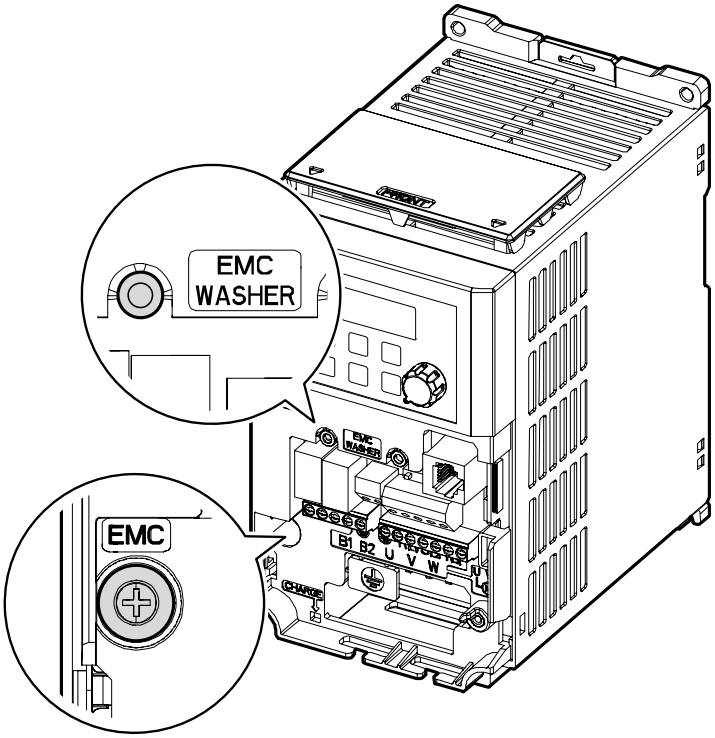

Step 7 Assembling the front cover

After completing the wiring and basic configurations, assemble the front cover in order. Note that the assembly procedure may vary according to the product group or frame size of the product.

2.3 Post-Installation Checklist

After completing the installation, check the items in the following table to make sure that the inverter has been safely and correctly installed.

Items	Details	Ref.	Result
Installation Location/Power I/O Verification	Is the installation location appropriate?	p.7	
	Does the environment meet the inverter's operating conditions?	p.8	
	Does the power source match the inverter's rated input?	p.360	
	Is the inverter's rated output sufficient to supply the equipment? (Derating is applied in specific conditions. Refer to **11.8 Continuous Rated Current Derating** on page **384** for more details.)	p.360	
Power Terminal Wiring	Is a circuit breaker installed on the input side of the inverter?	p.16	
	Is the circuit breaker correctly rated?	p.378	
	Are the power source cables correctly connected to the input terminals of the inverter? (Caution: connecting the power source to the U/V/W terminals may damage the inverter.)	p.27	
	Are the motor output cables connected in the correct phase order? (Caution: motors will rotate in reverse direction if the three phase cables are not wired in the correct rotation.)	p.27	
	Are the cables used in the power terminal connections correctly rated?	p.12	
	Is the inverter grounded correctly?	p.24	
	Are the power terminal screws and the ground terminal screws tightened to their specified torques?	p.27	
	Are the overload protection circuits installed correctly on the motors (if multiple motors are run using one inverter)?	-	
	Is the inverter separated from the power source by a magnetic contactor (if a braking resistor is in use)?	p.16	
	Are advanced-phase capacitors, surge protection and electromagnetic interference filters installed correctly? (These devices MUST not be installed on the output side of the inverter.)	p.27	

Items	Details	Ref.	Result
Control Terminal Wiring	Are shielded twisted pair (STP) cables used for control terminal wiring?	-	
	Is the shielding of the STP wiring properly grounded?	-	
	If 3-wire operation is required, are the multi-function input terminals defined prior to the installation of the control wiring connections?	p.32	
	Are the control cables properly wired?	p.32	
	Are the control terminal screws tightened to their specified torques?	p.18	
	Is the total cable length of all control wiring less than 165 ft (50 m)?	p.42	
	Is the total length of safety wiring less than 100 ft (30 m)?	p.42	
Miscellaneous	Are optional cards connected correctly?	-	
	Is there any debris left inside the inverter?	p.18	
	Are any cables contacting adjacent terminals, creating a potential short circuit risk?	-	
	Are the control terminal connections separated from the power terminal connections?	-	
	Have the capacitors been replaced if they have been in use for more than 2 years?	-	
	Have the fans been replaced if they have been in use for more than 3 years?	-	
	Has a fuse been installed for the power source?	p.379	
	Are the connections to the motor separated from other connections?	-	

Note

Shielded twisted pair (STP) cable has a highly conductive, shielded screen around twisted cable pairs. STP cables protect conductors from electromagnetic interference.

2.4 Test Run

After the post-installation checklist has been completed, follow the instructions below to test the inverter.

1 Turn on the power supply to the inverter. Ensure that the keypad display light is on.

2 Select the command source.

3 Set a frequency reference, and then check the following:

- If V1 is selected as the frequency reference source, does the reference change according to the input voltage?
- If V2 is selected as the frequency reference source, does the reference change according to the input voltage?
- If I2 is selected as the frequency reference source, does the reference change according to the input current?

4 Set the acceleration and deceleration time.

5 Start the motor and check the following:

- Ensure that the motor rotates in the correct direction. If the motor is rotating in the reverse direction, refer to the details below.
- Ensure that the motor accelerates and decelerates according to the set times, and that the motor speed reaches the frequency reference.

Note

If the forward command (FX) is on, the motor should rotate counterclockwise when viewed from the load side of the motor. If the motor rotates in the reverse direction, switch the cables at the U and V terminals.

Remarque

Si la commande avant (FX) est activée, le moteur doit tourner dans le sens anti-horaire si on le regarde côté charge du moteur. Si le moteur tourne dans le sens inverse, inverser les câbles aux bornes U et V.

Verifying the Motor Rotation

1. On the keypad, set the Frq (Frequency reference source) code in the Operation group to 0 (Keypad).
2. Set a frequency reference.
3. Press the [RUN] key. Motor starts forward operation.
4. Observe the motor's rotation from the load side and ensure that the motor rotates counterclockwise (forward).

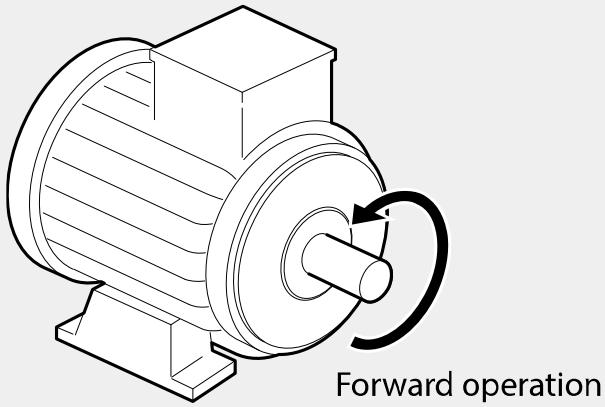

Caution

- Check the parameter settings before running the inverter. Parameter settings may have to be adjusted depending on the load.
- Do not supply the inverter with an input voltage that exceeds the rated voltage for the equipment. This may cause damage to the inverter.
- Before running the motor at maximum speed, confirm the motor's rated capacity. As inverters can be used to easily increase motor speed, take caution to ensure that motor speeds do not accidently exceed the motor's rated capacity.

3 Learning to Perform Basic Operations

This chapter describes the keypad layout, functions, and the operation method as well as the function groups used for the inverter operation and the basic operation method using the keypad. Become familiar with the correct basic operation method before advancing to more complex uses by setting the various features of the inverter and giving an operation command by changing the frequency or input voltage.

3.1 About the Keypad

The keypad is composed of two main components – the display and the operation (input) keys. Refer to the following illustration to identify part names and functions.

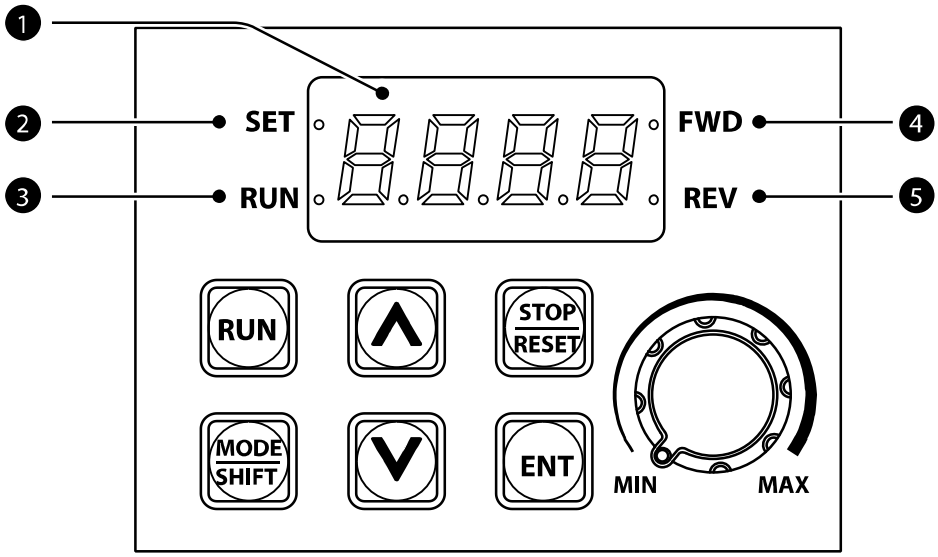

3.1.1 About the Display

The following table lists display part names and their functions.

No.	Name	Function
❶	7-Segment Display	Displays current operational status and parameter information.
❷	SET Indicator	LED flashes during parameter configuration and when the ESC key operates as the multi-function key.
❸	RUN Indicator	LED turns on (steady) during an operation, and flashes during acceleration or deceleration.
❹	FWD Indicator	LED turns on (steady) during forward operation.
❺	REV Indicator	LED turns on (steady) during reverse operation.

The table below lists the way that the keypad displays characters (letters and numbers).

Display	Number/ character	Display	Number/ character	Display	Number/ character	Display	Number/ character
0	0	A	A	K	K	U	U
1	1	b	B	L	L	v	V
2	2	C	C	n	M	w	W
3	3	d	D	n	N	x	X
4	4	E	E	o	O	y	Y
5	5	F	F	P	P	z	Z
6	6	G	G	q	Q		
7	7	H	H	r	R		
8	8	I	I	S	S		
9	9	J	J	t	T		

3.1.2 Operation Keys

The following table lists the names and functions of the keypad's operation keys.

Key	Name	Function
RUN	[RUN] key	Used to run the inverter.
STOP RESET	[STOP/RESET] key	STOP: Stops the inverter. RESET: Resets the inverter if a fault or failure occurs.
∧ ∨	[▲] key, [▼] key	Switches between codes or adjusts parameter values by increasing or decreasing them.
MODE SHIFT	[MODE/SHIFT] key	Moves between groups or moves to the digit on the left when setting the parameter. Press the MODE/SHIFT key once again on the maximum number of digits to move to the minimum number of digits.
ENT	[ENTER] key	Switches from the selected state of parameter to the input state. Edits parameter and apply change. Accesses the operation information screen during failure on the failure screen.
MIN MAX	[Volume]	Used to set the operation frequency.

* Operates as ESC key if two keys out of [MODE/SHIFT] key, [▲] key and [▼] key are entered at the same time.
- Press ESC in the group navigation mode to go to the initial screen (the frequency display screen).
- Press ESC in the mode to change parameter to go to group navigation mode without saving.

Caution

Install a separate emergency stop switch in the circuit. The [STOP/RESET] key on the keypad works only when the inverter has been configured to accept an input from the keypad.

3.1.3 Control Menu

The following table lists the functions groups under Parameter mode.

Group	Keypad Display	Description
Operation	-	Configures basic parameters for inverter operation.
Drive	dr	Configures parameters for basic operations. These include jog operation, motor capacity evaluation, torque boost, and other keypad related parameters.
Basic	bA	Configures basic operation parameters. These parameters include motor parameters and multi-step frequency parameters.
Advanced	Ad	Configures acceleration or deceleration patterns, frequency limits, etc.
Control	Cn	Configures sensorless vector-related features.
Input Terminal	In	Configures input terminal-related features, including digital multi-functional inputs and analog inputs.
Output Terminal	OU	Configures output terminal-related features such as relays and analog outputs.
Communication	Cm	Configures communication features for RS-485 or other communication options.
Application	AP	Configures functions related to PID control.
Protection	Pr	Configures motor and inverter protection features
Motor 2	m2	Configures secondary motor related features. The 2nd motor appears on the keypad only when one of the multi-function input terminals (In.65–In.72) has been set to 26.
User Sequence	US	Implement a simple sequence using a combination of different Function Blocks.
User Sequence Function	UF	

3.2 Learning to Use the Keypad

The keypad enables movement between groups and codes. It also enables users to select and configure functions. At code level, you can set parameter values to turn on or off specific functions, or decide how the functions will be used. Refer to **8 Table of Functions** on page **272** to find the functions you need.

Confirm the correct values (or the correct range of the values), and then follow the examples below to configure the inverter with the keypad.

3.2.1 Group and Code Selection

Follow the examples below to learn how to switch between groups and codes.

Step	Instruction	Keypad Display
1	Move to the group you want using the [MODE] keys. Press the [MODE] key for longer than 1 second to move in the opposite direction.	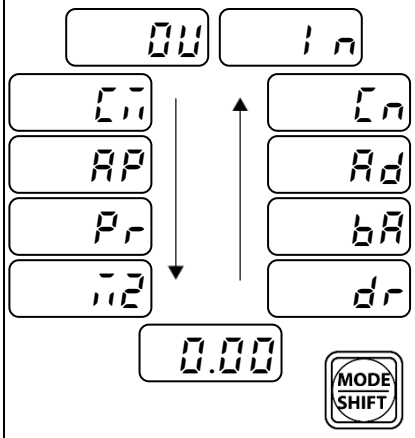
2	Move up and down through the codes using the [▲] and [▼] keys until you locate the code that you require.	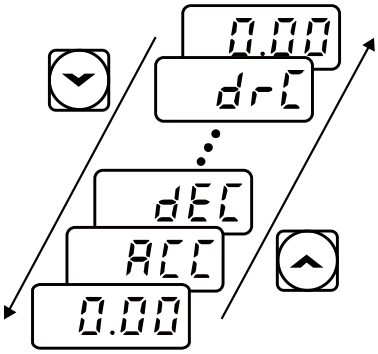
3	Press the [ENT] key to save the change.	-

Note

When moving up and down through the codes using the [▲] and [▼] keys in each group, there are cases where the code number does not increase or decrease. This is because the number was left blank in the inverter program by expecting additional features or the program was set up to not display the unused features.

Example) If Ad.24 (frequency limit) code is set to 0 (No), Ad.25 (frequency lower limit value) and Ad.26 (frequency upper limit value) codes will not be displayed. Ad.24 (frequency limit) code must be set to 1 (Yes) to display Ad.25 (frequency lower limit value) and Ad.26 (frequency upper limit value) codes.

3.2.2 Navigating Directly to Different Codes (Jump Codes)

The following example details navigating to code dr. 95, from the initial code in the Drive group (dr. 0). This example applies to all groups whenever you would like to navigate to a specific code number.

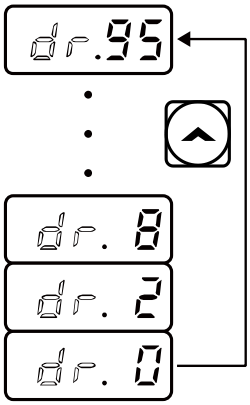

Step	Instruction	Keypad Display
1	Ensure that you are currently at the first code of the Drive group (dr.0).	dr.0
2	Press the [ENT] key. Number "9" will flash.	9
3	Press the [▼] key and change the ones' place number to "5", so the destination code is "95".	5
4	Press the [MODE] to move to the tens' place. The cursor will move to the left and "05" will be displayed. At this time, the number "0" will be flashing.	05
5	Press the [▲] key to change the tens' place number to "9", so the destination code is "95".	95
6	Press the [ENT] key. Code dr.95 is displayed.	dr.95

3.2.3 Setting Parameter Values

Enable or disable features by setting or modifying parameter values for different codes. Directly enter setting values, such as frequency references, supply voltages, and motor speeds. Follow the instructions below to learn to set or modify parameter values.

Step	Instruction	Keypad Display
1	Select the group and code to set up or modify parameter settings, and then press the [ENT] key. The first number on the right side of the display will flash.	5.0
2	Move to the place value to edit using the Mode key, change the value using the [▲] and [▼] keys, and then press the [ENT] key. Press the [MODE] key for longer than 1 second to move to the left place value. The selected value will flash on the display.	6.0 5.0 4.0
3	Press the [ENT] key again to save the changes.	-

Note

- A flashing number on the display indicates that the keypad is waiting for an input from the user. Changes will be saved when the [ENT] key is pressed while the number is flashing. The setting change will be canceled if you press any other key.
- Each code's parameter values have default features and ranges specified. Refer to **8 Table of Functions** on page **272** for information about the features and ranges before setting or modifying parameter values.

3.3 Actual Application Examples

3.3.1 Acceleration Time Configuration

The following is an example demonstrating how to modify the Acceleration time (ACC) code value (from 5.0 to 16.0) from the Operation group.

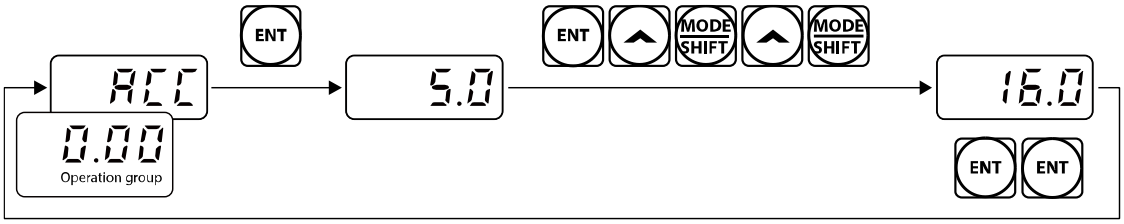

Step	Instruction	Keypad Display
1	Ensure that the first code of the Operation group is selected, and code 0.00 (Command Frequency) is displayed.	0.00
2	Press the [▲] key. The display will change to the second code in the Operation group, the acceleration time (ACC) code.	ACC
3	Press the [ENT] key. The number "5.0" will be displayed, with "0" flashing. This indicates that the current acceleration time is set to 5.0 seconds. The flashing value is ready to be modified by using the keypad.	5.0
4	Press the [MODE] key to change the place value. "5" in the ones' place from "5.0" will flash. This indicates the flashing value, "5" is ready to be modified.	5.0
5	To make the target value "16.0", press the [▲] key to change the ones' place value to "6".	6.0
6	Press the [MODE] key to move to the tens' place value. "0" in the tens' place from "06.0" will flash.	06.0
7	To make the target value "16.0", press the [▲] key to change the tens' place value to "1", and then press the [ENT] key. The selected value will flash on the display.	16.0
8	Press the [ENT] key again to save the changes. "ACC" will be displayed. The change to the acceleration time setup has been completed.	ACC

3.3.2 Frequency Reference Configuration

The following is an example to demonstrate configuring a frequency reference of 30.05 Hz from the first code in the Operation group.

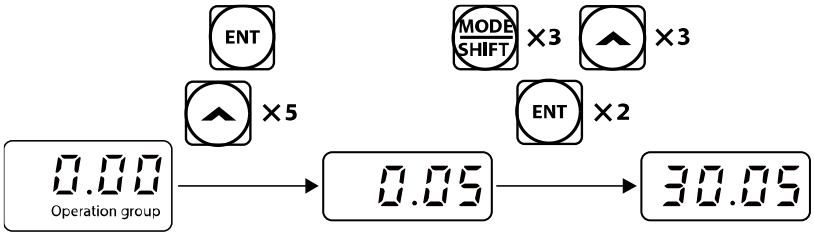

Step	Instruction	Keypad Display
1	Ensure that the first code of the Operation group is selected, and code 0.00 (Command Frequency) is displayed.	0.00
2	Press the [ENT] key. The default value "0.00" will be displayed and "0" in the second decimal place will flash.	0.00
3	Press the [MODE] key 3 times to move to the tens' place value. "0" in the tens' place will flash.	00.00
4	To make the target value "30.05", press the [▲] key to change the tens' place value to "3."	30.00
5	Press the [MODE] key 2 times. The "0" in the second decimal place will flash.	30.00
6	To make the target value "30.05", press the [▲] key to change the second decimal place value to "5", and then press the [ENT] key. The selected value will flash on the display.	30.05
7	Press the [ENT] key again to save the changes. Flashing stops. The frequency reference has been configured to 30.05 Hz.	30.05

Note

- A flashing number on the display indicates that the keypad is waiting for an input from the user. Changes will be saved when the [ENT] key is pressed while the number is flashing. The setting change will be canceled if you press any other key.
- The G100 inverter keypad display can display up to 4 digits. However, 5-digit figures can be used and are accessed by pressing the [MODE] key, to allow keypad input.
- By default, LS Drives are set to 60.00 Hz. If your application in a country with 50.00Hz and your motor is also designed for 50.00 Hz, you need to go to the bA.10 and select 1(50.00 Hz). This will change all related parameters automatically: Base Freq. / Max Freq. / Fire Mode Freq. / Speed Limit / Freq at 100% / PID / etc.

3.3.3 Jog Frequency Configuration

The following example demonstrates how to configure Jog Frequency by modifying code 11 (Jog Frequency) in the Drive group from 10.00 Hz to 20.00 Hz. You can configure the parameters for different codes in any other group in exactly the same way.

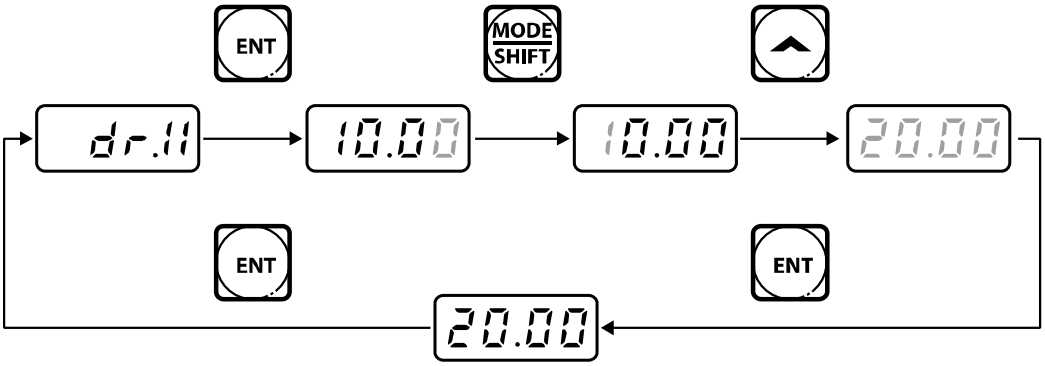

Step	Instruction	Keypad Display
1	Go to code 11 (dr.11) in the Drive group.	dr.11
2	Press the [ENT] key. The current Jog Frequency value (10.00) for code dr.11 is displayed.	10.00
3	Press the [MODE] key 3 times to move to the tens' place value. "1" in the tens' place will flash.	10.00
4	To make the target value "20.00", press the [▲] key to change the tens' place value to "2", and then press the [ENT] key. The selected value will flash on the display.	20.00
5	Press the [ENT] key again to save the changes. Code dr.11 will be displayed. The parameter change has been completed.	dr.11

3.3.4 Parameter Initialization

The following example demonstrates parameter initialization using code dr.93 (Parameter Initialization) in the Drive group.

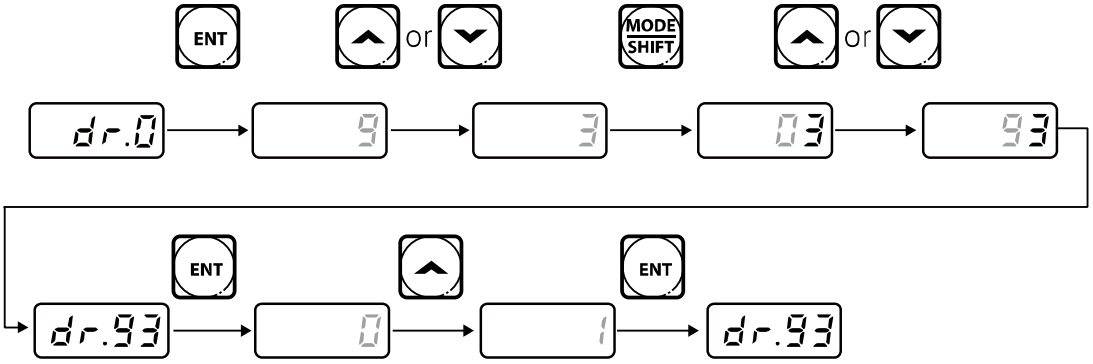

Step	Instruction	Keypad Display
1	Go to code 0 in the Drive group.	dr.0
2	Press the [ENT] key. The current parameter value "9" will be displayed.	9
3	To make the target value "93", press the [▼] key to change the ones' place value to "3".	3
4	Press the [MODE] key to move to the tens' place value.	03
5	To make the target value "93", press the [▲] or [▼] key to change the tens' place value "9".	93
6	Press the [ENT] key. Code dr.93 will be displayed.	dr.93
7	Press the [ENT] key once again. The current parameter value for code dr.93 is set to 0 (Do not initialize).	0
8	Press the [▲] key to change the value to 1 (All Grp), and then press the [ENT] key. The parameter value will flash.	1
9	Press the [ENT] key once again. Parameter initialization begins. Parameter initialization is complete when code dr.93 reappears on the display.	dr.93

Note

Following parameter initialization, all parameters are reset to factory default values. Ensure that parameters are reconfigured before running the inverter again after an initialization.

3.3.5 Frequency Setting (Keypad) and Operation (via Terminal Input)

Step	Instruction	Keypad Display
1	Turn on the inverter.	-
2	Ensure that the first code of the Operation group is selected, and code 0.00 (Command Frequency) is displayed, then press the [ENT] key. The first number on the right side of the display will flash.	0.00
3	Press the [MODE] key 3 times to move to the tens' place value. "0" in the tens' place will flash.	00.00
4	Press the [▲] key to change it to 10.00, and then press the [ENT] key. The selected value will flash on the display.	10.00
5	Press the [ENT] key again to save the changes. The reference frequency has been changed.	10.00
6	Refer to the wiring diagram at the bottom of the table, and turn on the switch between the P1 (FX) and CM terminals. The RUN indicator light flashes and the FWD indicator light comes on steady. The current acceleration frequency is displayed.	SET RUN 10.00 FWD REV
7	When the frequency reference is reached (10 Hz), open the switch between the P1 (FX) and CM terminals. The RUN indicator light flashes again and the current deceleration frequency is displayed. When the frequency reaches 0 Hz, the RUN and FWD indicator lights turn off, and the frequency reference, 10.00, is displayed again.	SET RUN 10.00 FWD REV

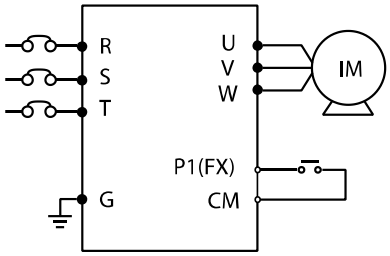

[Wiring Diagram]

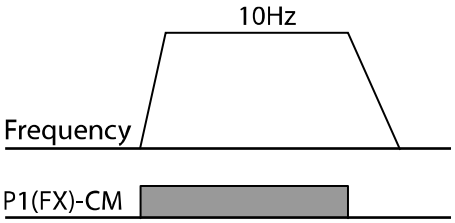

[Operation Pattern]

Note

The instructions in the table are based on the factory default parameter settings. The inverter may not work correctly if the default parameter settings are changed after the inverter is purchased. In such cases, initialize all parameters to reset the values to the factory default parameter settings before following the instructions in the table (refer to **5.21 Parameter initialization** on page **182**).

3.3.6 Frequency Setting (Potentiometer) and Operation (Terminal Input)

Step	Instruction	Keypad Display
1	Turn on the inverter.	-
2	Ensure that the first code of the Operation group is selected, and code 0.00 (Command Frequency) is displayed.	0.00
3	Press the [▲] key 4 times. Move to the Frq (Frequency reference source) code.	Frq
4	Press the [ENT] key. The Frq code in the Operation group is currently set to 0 (keypad).	0
5	Press the [▲] key to change the parameter value to 2 (V1-Set frequency input to potentiometer), and then press the [ENT] key. The parameter value will flash.	2
6	Press the [ENT] key once again. The Frq code will be displayed again. The frequency input has been configured for the potentiometer.	Frq
7	Press the [▼] key 4 times. Move to the first code of the Operation group (0.00). From here frequency setting values can be monitored.	0.00

Step	Instruction	Keypad Display
8	Adjust the potentiometer to increase or decrease the frequency reference to 10 Hz.	-
9	Refer to the wiring diagram at the bottom of the table, and turn on the switch between the P1 (FX) and CM terminals. The RUN indicator light flashes and the FWD indicator light comes on steady. The current acceleration frequency is displayed.	SET RUN 10.00 FWD REV
10	When the frequency reference is reached (10 Hz), open the switch between the P1 (FX) and CM terminals. The RUN indicator light flashes again and the current deceleration frequency is displayed. When the frequency reaches 0 Hz, the RUN and FWD indicator lights turn off, and the frequency reference, 10.00, is displayed again.	SET RUN 10.00 FWD REV

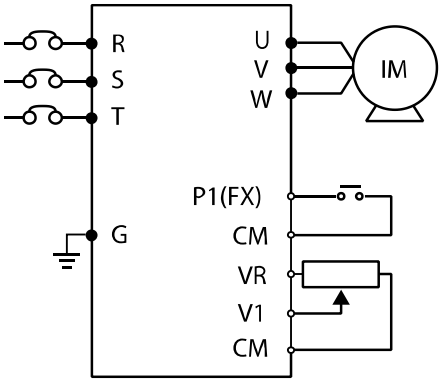

[Wiring Diagram]

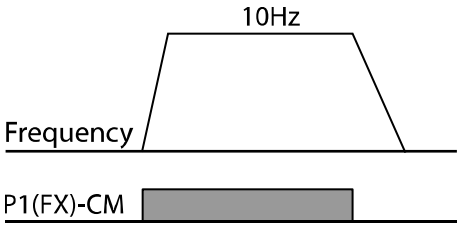

[Operation Pattern]

Note

The instructions in the table are based on the factory default parameter settings. The inverter may not work correctly if the default parameter settings are changed after the inverter is purchased. In such cases, initialize all parameters to reset the values to factory default parameter settings before following the instructions in the table (refer to **5.21 Parameter initialization** on page **182**).

3.3.7 Frequency setting with (internal) potentiometer and operation command with the keypad [RUN] key

Step	Instruction	Keypad Display
1	Turn on the inverter.	-
2	Ensure that the first code of the Operation group is selected, and code 0.00 (Command Frequency) is displayed.	0.00
3	Press the [▲] key 3 times. Move to the operation group drv (command source) code.	drv
4	Press the [ENT] key. The drv code in the Operation group is currently set to 1 (FX/RX1 operation command set from the terminal block).	1
5	Press the [▼] key to change the parameter value to 0 (Keypad), and then press the [ENT] key. The parameter value will flash.	0
6	Press the [ENT] key once again. The drv code is displayed again. The frequency input has been configured for the keypad.	drv
7	Press the [▲] key 1 times. Move to the Frq (Frequency reference source) code.	Frq
8	Press the [ENT] key. The Frq code in the Operation group is currently set to 0 (keypad).	0
9	Press the [▲] key to change the parameter value to 4 (V0-Set frequency input to (internal) potentiometer), and then press the [ENT] key. The parameter value will flash.	4
10	Press the [ENT] key once again. The Frq code will be displayed again. The frequency input has been configured for the potentiometer.	Frq
11	Press the [▼] key 4 times. Move to the first code of the Operation group (0.00). From here frequency setting values can be monitored	0.00
12	Adjust the (internal) potentiometer to increase or decrease the frequency reference to 10 Hz.	-
13	Press the [RUN] key. The RUN indicator light flashes and the FWD indicator light comes on steady. The current acceleration frequency is displayed.	SET RUN 10.00 FWD REV

Step	Instruction	Keypad Display
14	When the frequency reaches the reference (10 Hz), press the [STOP/RESET] key on the keypad. The RUN indicator light flashes again and the current deceleration frequency is displayed. When the frequency reaches 0 Hz, the RUN and FWD indicator lights turn off, and the frequency reference, 10.00, is displayed again.	SET RUN 10.00 FWD REV

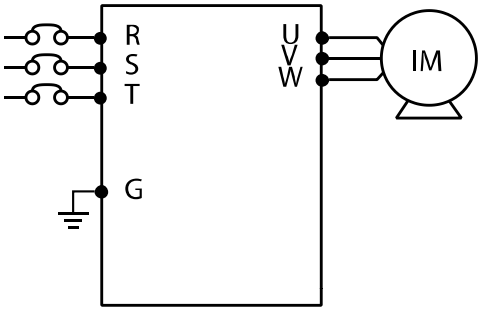

[Wiring Diagram]

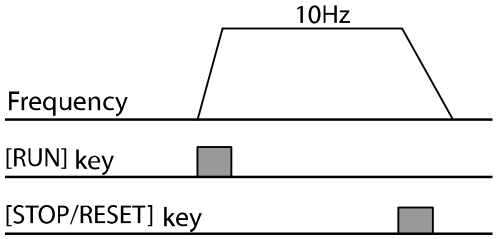

[Operation Pattern]

Note

The instructions in the table are based on the factory default parameter settings. The inverter may not work correctly if the default parameter settings are changed after the inverter is purchased. In such cases, initialize all parameters to reset the values to factory default parameter settings before following the instructions in the table (refer to **5.21 Parameter initialization** on page **182**).

3.4 Monitoring the Operation

3.4.1 Output Current Monitoring

The following example demonstrates how to monitor the output current in the Operation group using the keypad.

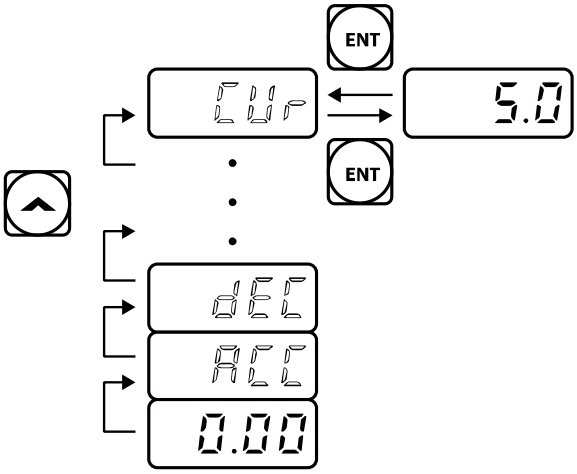

Step	Instruction	Keypad Display
1	Ensure that the first code of the Operation group is selected, and code 0.00 (Command Frequency) is displayed.	0.00
2	Press the [▲] or [▼] key to move to the Cur code.	Cur
3	Press the [ENT] key. The output current (5.0 A) is displayed.	5.0
4	Press the [ENT] key once again. Returns to the Cur code.	Cur

Note

You can use the dCL (DC link voltage monitor) and vOL (output voltage monitor) codes in the Operation group in exactly the same way as shown in the example above, to monitor each function's relevant values.

3.4.2 Trip Condition Monitor

The following example demonstrates how to monitor fault trip conditions in the Operation group using the keypad.

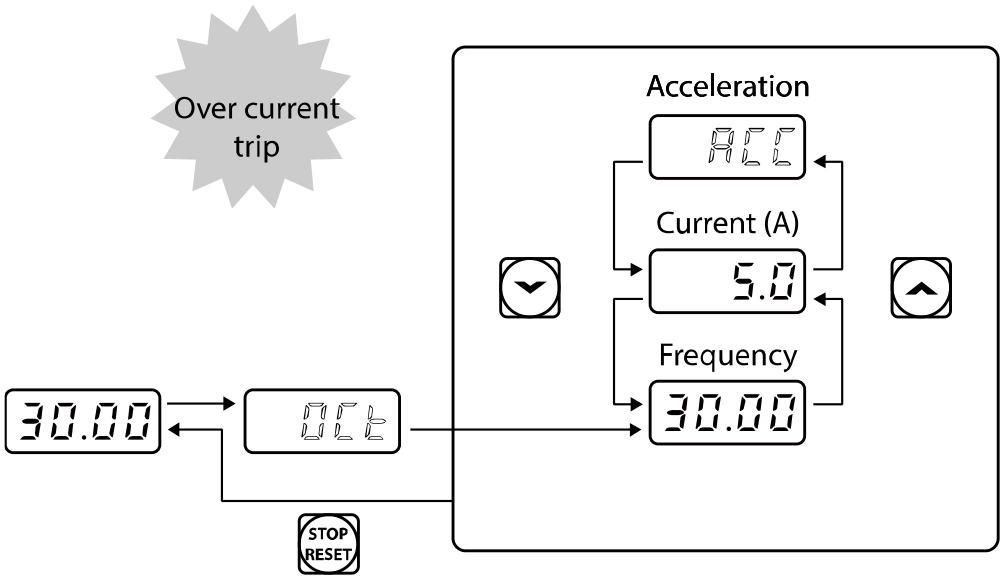

Step	Instruction	Keypad Display
1	Refer to the example keypad display. An over current trip fault has occurred.	OCt
2	Press the [ENT] key, and then the [▲] key. The operation frequency at the time of the fault (30.00 Hz) is displayed.	30.00
3	Press the [▲] key. The output current at the time of the fault (5.0 A) is displayed.	5.0
4	Press the [▲] key. The operation status at the time of the fault is displayed. ACC on the display indicates that the fault occurred during acceleration.	ACC
5	Press the [STOP/RESET] key. The inverter resets and the fault condition is cleared. The frequency reference is displayed on the keypad.	30.00

Note

- If multiple fault trips occur at the same time, a maximum of 3 fault trip records can be retrieved as shown in the following example.

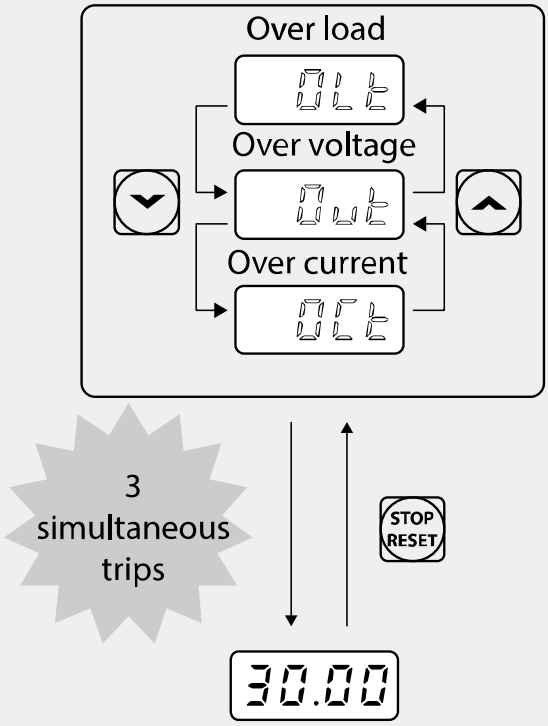

- If a warning situation occurs while operating with the entered frequency, a UArn display and the current screen will flash in 1 second intervals. Refer to **6.2.6 Under load Fault Trip and Warning** on page **225** for more details.

4 Learning Basic Features

This chapter describes the basic features of the G100 inverter. Check the reference page in the table to see the detailed description for each of the basic features.

Basic Tasks	Use Example	Ref.
Frequency reference source configuration for the keypad	Configures the inverter to allow you to setup or modify frequency reference using the Keypad.	p.75
Frequency reference source configuration for the terminal block (input voltage)	Configures the inverter to allow input voltages at the terminal block (V1,V2) and to setup or modify a frequency reference.	p.76
Frequency reference source configuration for the terminal block (input current)	Configures the inverter to allow input currents at the terminal block (I2) and to setup or modify a frequency reference.	p.82
Frequency reference source configuration for RS-485 communication	Configures the inverter to set the frequency to the upper level controllers, such as PLCs or PCs, via the communications terminal (S+/S-) of the terminal block or the RJ45 connector.	p.90
Frequency Hold by Analog Input	Enables the user to hold a frequency using analog inputs at terminals.	p.90
Multi-step frequency configuration	Configures multi-step frequency operations by receiving an input at the terminals defined for each step frequency.	p.91
The Keypad as a Command Input Device	Configures the inverter to start the operation with the [RUN] key on the keypad and stop with the [STOP/RESET] keys.	p.93
Command source configuration for terminal block inputs	Configures the inverter to accept inputs at the FX/RX terminals.	p.93
RS-485 Communication as a Command Input Device	Configures the inverter to allow communication signals from upper level controllers, such as PLCs or PCs, and to set up an operation command using S+ and S- terminals or the RJ45 connector.	p.95
Forward or Reverse Run Prevention	Configures the inverter to limit a motor’s rotation direction.	p.95
start at power-on	Configures to accelerate instantly if the operation command is on when inverter power is supplied.	p.96
Automatic restart after reset of a fault trip condition	Configures the inverter to start operating if the operation command is on after the inverter is reset following a fault trip.	p.97

Basic Tasks	Use Example	Ref.
	For automatic start-up configuration to work, the operation command terminals at the terminal block must be turned on.	
Acc/Dec Time Based on Maximum Frequency	Configures the acceleration and deceleration times for a motor based on a defined maximum frequency.	p.98
Acc/Dec Time Based on Operation Frequency	Configures acceleration and deceleration times for a motor based on a defined frequency reference.	p.99
Multi-step Acc/Dec Time Configuration	Configures multi-stage acceleration and deceleration times for a motor based on defined parameters for the multi-function terminals.	p.100
Acc/Dec time switch frequency	Enables modification of acceleration and deceleration gradients without configuring the multi-functional terminals.	p.102
Acc/Dec pattern configuration	Enables modification of the acceleration and deceleration gradient patterns. Basic patterns to choose from include linear and S-curve patterns.	p.103
Acc/Dec stop command configuration	Stops the current acceleration or deceleration and controls motor operation at a constant speed. Multi-function terminals must be configured for this command.	p.105
Linear V/F pattern operation	Used for loads that require constant torque regardless of the frequency.	p.105
Square reduction V/F pattern operation	Configures the inverter to run the motor at a square reduction V/F pattern. Fans and pumps are appropriate loads for square reduction V/F operation.	p.106
User V/F pattern Operation	Enables the user to set the parameter according to the V/F pattern and the load characteristics of the motor.	p.107
Manual torque boost	Manual configuration of the inverter to produce a momentary torque boost. This configuration is for loads that require a large amount of starting torque, such as elevators or lifts.	p.109
Auto torque boost	Automatically adjusts the torque or is used when a large amount of starting torque is required.	p.110
Motor output voltage adjustment	Adjusts the output voltage to the motor when the power supply to the inverter differs from the motor's rated input voltage.	p.111
Accelerating start	Acceleration start is a general acceleration mode. If there are no extra settings applied, the motor accelerates directly to the frequency reference when the command is input.	p.111

Basic Tasks	Use Example	Ref.
DC braking after start	Configures the inverter to perform DC braking before the motor starts rotating again. This configuration is used when the motor will be rotating before the voltage is supplied from the inverter.	p.112
Deceleration stop	Deceleration stop is the typical method used to stop a motor. The motor decelerates to 0 Hz and stops on a stop command, however there may be other stop or deceleration conditions defined.	p.113
DC braking after stop	The frequency at which DC braking occurs must be defined and during deceleration, when the motor reaches the defined frequency, DC braking is applied.	p.114
Free-run stop	When the Operation command is off, the inverter output turns off, and the load stops due to residual inertia.	p.115
Power braking	Configures the inverter to provide optimal, motor deceleration, without tripping over-voltage protection.	p.116
Start/maximum frequency configuration	Configures the frequency reference limits by defining a start frequency and a maximum frequency.	p.116
Frequency Limit Using Upper and Lower Limit Frequency Values	Configures the frequency reference limits by defining an upper limit and a lower limit.	p.117
Frequency jump	Configures the inverter to avoid running a motor in mechanically resonating frequencies.	p.118
2nd Operation Configuration	Used to configure the 2nd operation mode and switch between the operation modes according to your requirements.	p.119
Multi-function Input Terminal Control	Enables the user to improve the responsiveness of the multi-function input terminals.	p.120
User Sequence settings	Used to implement simple sequences with a combination of different Functional Blocks.	p.123

4.1 Frequency Reference Configuration

The G100 inverter provides several methods to setup and modify a frequency reference for an operation. The keypad, analog inputs [for example voltage (V1) and current (I2) signals], RS-485, Fieldbus option card, and UserSeqLink can be used. When UserSeqLink is selected, it can be used as a frequency command by linking the common area with the output of the user sequence.

Group	Code	Name	Setting		Setting Range	Unit
Operation	Frq	Frequency reference source	0	KeyPad-1	0–9	-
			1	KeyPad-2		
			2	V1		
			3	V2		
			4	V0		
			5	I2		
			6	Int 485		
			8	Fieldbus		
			9	UserSeqLink		

4.1.1 Set the Operation Frequency from the Keypad - Direct Input

You can modify frequency reference by using the keypad and apply changes by pressing the [ENT] key. To use the keypad as a frequency reference input source, go to the Frq (Frequency reference source) code in the Operation group and change the parameter value to 0 (Keypad-1). Input the frequency reference for an operation at the 0.00 (Command Frequency) code in the Operation group.

Group	Code	Name	Setting		Setting Range	Unit
Operation	Frq	Frequency reference source	0	KeyPad-1	0–9	-
	0.00	Target frequency	0.00		Min to Max Frq*	Hz

* You cannot set a frequency reference that exceeds the Max. Frequency, as configured with dr.20.

4.1.2 Set the Operation Frequency from the Keypad - Using [▲] and [▼] keys

You can use the [▲] and [▼] keys like a potentiometer to modify the frequency reference. Select the Frq (Frequency reference source) code in the Operation group to 1 (Keypad-2). This allows frequency reference values to be increased or decreased when the [▲] and [▼] keys are pressed from the Operation group 0.00 (target frequency).

Group	Code	Name	Setting		Setting Range	Unit
Operation	Frq	Frequency reference source	1	KeyPad-2	0–9	-
	0.00	Target frequency	0.00		Min to Max Frq*	Hz

* You cannot set a frequency reference that exceeds the Max. Frequency, as configured with dr.20.

4.1.3 V1 Terminal as the Source

You can set the frequency by inputting the voltage from the V1 terminal (frequency setting voltage terminal) from the control terminal block. Use voltage inputs ranging from 0 to 10 V (unipolar) for forward only operation. Use voltage inputs ranging from -10 to +10 V (bipolar) for both directions, where negative voltage inputs are used reverse operations.

4.1.3.1 Setting a Frequency Reference for 0–10 V Input

Set the Frq (Frequency reference source) code in the Operation group to 2 (V1), and then set code 06 (V1 Polarity) to 0 (unipolar) in the Input Terminal group (IN). Use the voltage output of the external controller or use the VR terminal (frequency setting power terminal) of the control terminal to input voltage in the V1 terminal as the volume resistance.

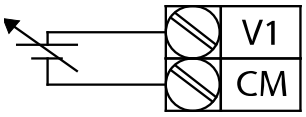

[Connecting to external power source]

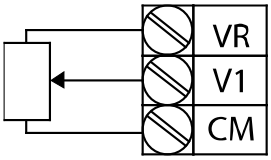

[Connecting to internal power source]

Group	Code	Name	Setting		Setting Range	Unit
Operation	Frq	Frequency reference source	2	V1	0–9	-
In	01	Frequency for maximum analog input	Maximum frequency		Start Frequency–Max. Frequency	Hz
	05	V1 input voltage display	0.00		0.00–12.00	V
	06	V1 input polarity selection	0	Unipolar	0–1	-
	07	V1 input filter time constant	100		0–10000	msec
	08	V1 minimum input voltage	0.00		0.00–10.00	V
	09	V1 output at Minimum voltage (%)	0.00		0.00–100.00	%
	10	V1 maximum input voltage	10.00		0.00–12.00	V
	11	V1 output at Maximum voltage (%)	100.00		0–100	%
	16	Rotation direction options	0	No	0–1	-
	17	V1 quantization level	0.04		0.00*, 0.04–10.00	%

* Quantizing is disabled if "0" is selected.

0–10 V Input Voltage Setting Details

Code and Features	Description
In.01 Freq at 100%	Configures the frequency reference at the maximum input voltage when a potentiometer is connected to the control terminal block. A frequency set with code In.01 becomes the maximum frequency only if the value set in code In.11 (or In.15) is 100.00%. • Set code In.01 to 40.00 and use default values for codes In.02–In.16. Motor will run at 40.00 Hz when a 10 V input is provided at V1. • Set code In.11 to 50.00 and use default values for codes In.01–In.16. Motor will run at 30.00 Hz (50% of the default maximum frequency–60 Hz) when a 10 V input is provided at V1.
In.05 V1 Monitor[V]	Configures the inverter to monitor the input voltage at V1.
In.07 V1 Filter	As a low-pass filter, use if there is significant variation of frequency parameter setting value due to high noise level. When used, it filters the analog signal to pass only the clean input signals. The higher the number of time constant filter, the lower the variation in frequency. However, this slows down the time t and thus affects the response time. The value t (time) indicates the time required for the frequency to reach 63% of the reference, when external input voltages are provided in multiple steps.

Code and Features	Description
	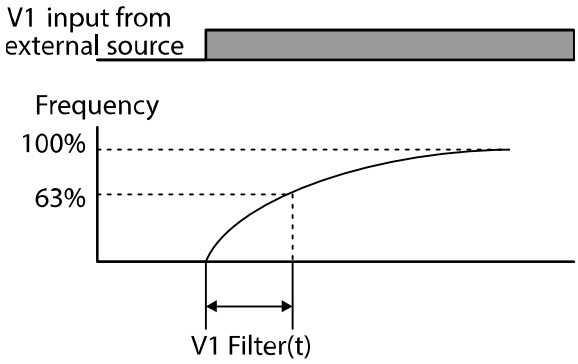
In.08 V1 volt x1– In.11 V1 Perc y2	These parameters are used to configure the gradient level and offset values of the Output Frequency, based on the Input Voltage. 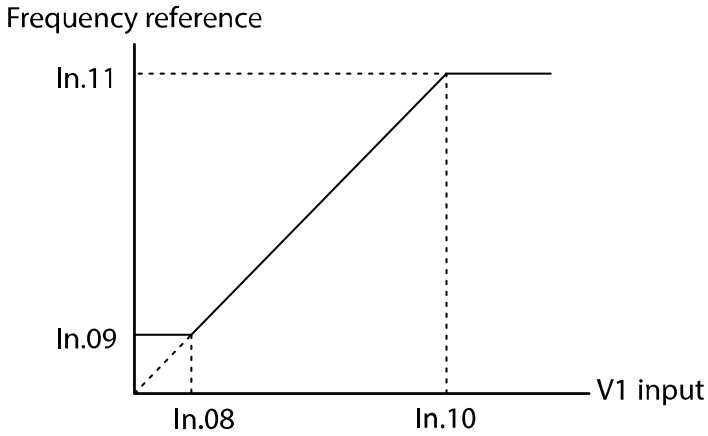
In.16 V1 Inverting	Inverts the input value of V1. Set this code to 1 (Yes) if you need the motor to run in the opposite direction from the current rotation.
In.17 V1 Quantizing (Quantizing)	Quantizing may be used when the noise level is high in the analog input (V1 terminal) signal. The frequency is output by measuring (quantizing) the height (value) of the input signal in a consistent interval. This means that the delicate control on the output frequency (power resolution) is low, but the noise is reduced, so it is suitable for systems that are sensitive to noise. Parameter values for quantizing refer to a percentage based on the maximum input. Therefore, if the value is set to 1% of the analog maximum input of 10 V and maximum frequency of 60 Hz, the output frequency will increase or decrease by 0.6 Hz per 0.1V difference. To reduce the effect of the input signal changes (runout of height) on the operation frequency, the output frequency during increase or decrease of input signal value (height) is applied differently. When the

Code and Features	Description
	input signal value increases, the output frequency starts changing if the height becomes equivalent to 3/4 of the quantizing value. From then on, the output frequency increases according to the quantizing value. On the other hand, when the input signal decrease, the output frequency starts decreasing if the height becomes equivalent to 1/4 of the quantizing value. Although the noise can be reduced using the low-pass filter (In.07), the response on the input signal takes long as the set value gets higher. Since it becomes difficult to control the frequency if the input signal is delayed, a period of long pulse (ripple) may occur on the output frequency. 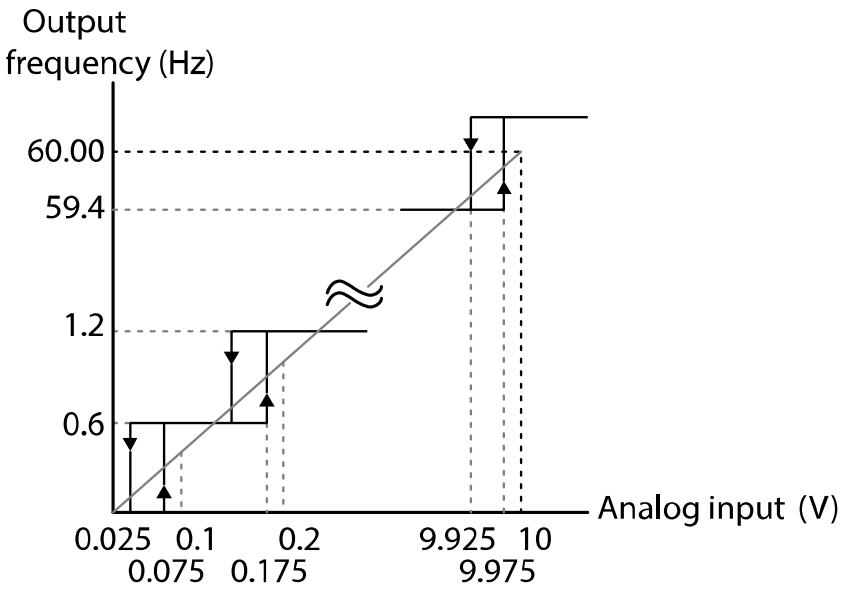

4.1.3.2 Setting a Frequency Reference for -10–10 V Input

Set the Frq (Frequency reference source) code in the Operation group to 2 (V1), and then set code 06 (V1 Polarity) to 1 (bipolar) in the Input Terminal group (IN). Use the output voltage from an external source to provide input to V1 (Frequency setting voltage terminal).

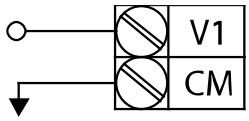

[Setting voltage of -10 –+10 V on a V1 terminal]

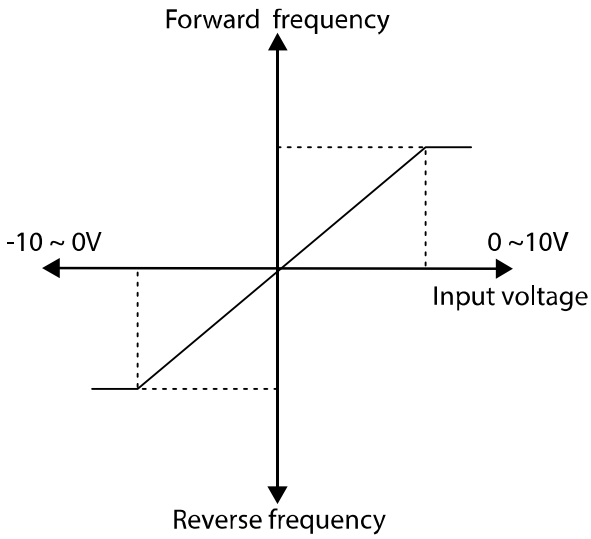

[Bipolar input voltage and output frequency]

Group	Code	Name	Setting		Setting Range	Unit
Operation	Frq	Frequency reference source	2	V1	0–9	-
In	01	Frequency for maximum analog input	60.00		0–Max Frequency	Hz
	05	V1 input voltage display	0.00		0.00–12.00 V	V
	06	V1 input polarity selection	1	Bipolar	0–1	-
	12	V1 Minimum input voltage	0.00		10.00–0.00 V	V

Group	Code	Name	Setting	Setting Range	Unit
	13	V1 output at Minimum voltage (%)	0.00	-100.00–0.00%	%
	14	V1 Maximum input voltage	-10.00	-12.00–0.00 V	V
	15	V1 output at Maximum voltage (%)	-100.00	-100.00–0.00%	%

Rotational Directions for Different Voltage Inputs

Operation command	Input voltage	
	0–10 V	-10–0 V
FWD	Fwd	Rev
REV	Rev	Fwd

-10–10 V Voltage Input Setting Details

Code and Features	Description
In.12 V1– volt x1– In.15 V1– Perc y2	Sets the gradient level and off-set value of the output frequency in relation to the input voltage. These codes are displayed only when In.06 is set to 1 (bipolar). For example, if the In.12 code is set to -2 V, In.13 code is set to 10%, In.14 code is set to -8 V, and In.15 code is set to 80%, the output frequency will vary within the range of 6–48 Hz. 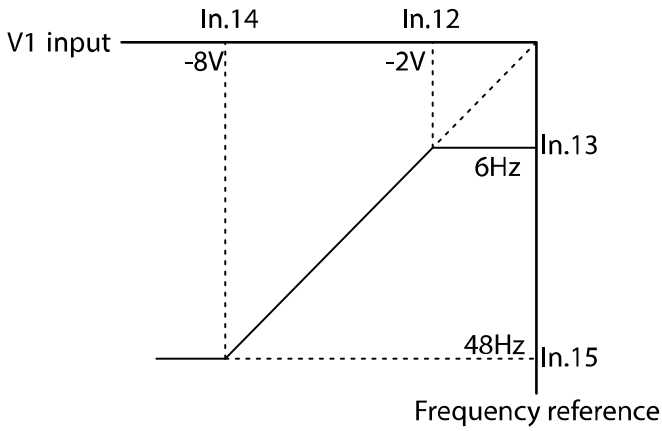 For details about the 0–+10 V analog inputs, refer to the code descriptions **In.08 V1 volt x1–In.11 V1 Perc y2** on page **78**.

4.1.4 V2 Terminal as the Source

You can set the frequency by inputting the voltage from the V2 terminal (frequency setting voltage terminal) from the control terminal block. Use voltage inputs ranging from 0 to 10 V (unipolar) for forward only operation. Use voltage inputs ranging from -10 to +10 V (bipolar) for both directions, where negative voltage inputs are used reverse operations.

4.1.4.1 Setting a Frequency Reference for 0–10 V Input

Set the Frq (Frequency reference source) code in the Operation group to 3 (V2), and then set code 19 (V2 Polarity) to 0 (unipolar) in the Input Terminal group (IN). Use the voltage output of the external controller or use the VR terminal (frequency setting power terminal) of the control terminal to input voltage in the V2 terminal as the volume resistance.

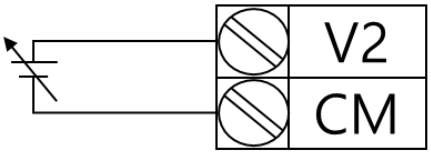

[Connecting to external power source]

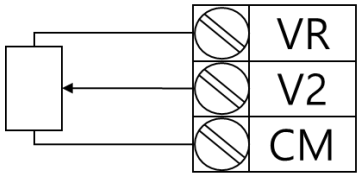

[Connecting to internal power source]

Group	Code	Name	Setting		Setting Range	Unit
Operation	Frq	Frequency reference source	3	V2	0–9	-
In	01	Frequency for maximum analog input	Maximum frequency		Start Frequency–Max. Frequency	Hz
	18	V2 input voltage display	0.00		0.00–12.00	V
	19	V2 input polarity selection	0	Unipolar	0–1	-
	20	V2 input filter time constant	100		0–10000	msec
	21	V2 minimum input voltage	0.00		0.00–10.00	V
	22	V2 output at Minimum voltage (%)	0.00		0.00–100.00	%
	23	V2 maximum input voltage	10.00		0.00–12.00	V
	24	V2 output at Maximum voltage (%)	100.00		0–100	%
	29	Rotation direction options	0	No	0–1	-
	30	V2 quantization level	0.04		0.00*, 0.04–10.00	%

* Quantizing is disabled if "0" is selected.

0–10 V Input Voltage Setting Details

Code and Features	Description
In.01 Freq at 100%	Configures the frequency reference at the maximum input voltage when a potentiometer is connected to the control terminal block. A frequency set with code In.01 becomes the maximum frequency only if the value set in code In.11 (or In.15) is 100.00%. • Set code In.01 to 40.00 and use default values for codes In.21–In.29. Motor will run at 40.00 Hz when a 10 V input is provided at V2. • Set code In.24 to 50.00 and use default values for codes In.01, In.21–In.29. Motor will run at 30.00 Hz (50% of the default maximum frequency–60 Hz) when a 10 V input is provided at V1.
In.18 V2 Monitor[V]	Configures the inverter to monitor the input voltage at V2.
In.20 V2 Filter	As a low-pass filter, use if there is significant variation of frequency parameter setting value due to high noise level. When used, it filters the analog signal to pass only the clean input signals. The higher the number of time constant filter, the lower the variation in frequency. However this slows down the time t and thus affects the response time. The value t (time) indicates the time required for the frequency to reach 63% of the reference, when external input voltages are provided in multiple steps.

Code and Features	Description
	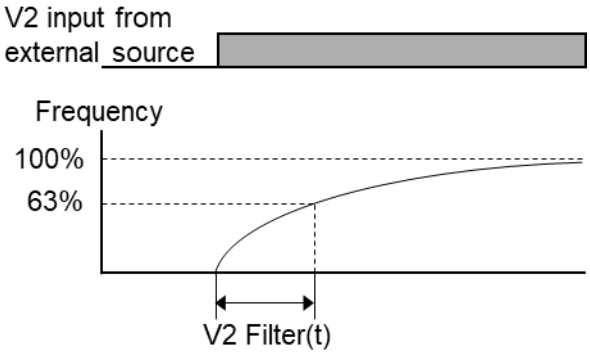
In.21 V2 volt x1– In.24 V2 Perc y2	These parameters are used to configure the gradient level and offset values of the Output Frequency, based on the Input Voltage. 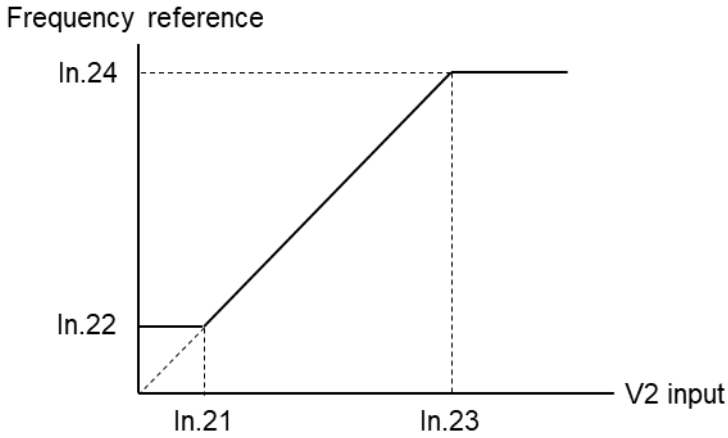
In.29 V2 Inverting	Inverts the input value of V2. Set this code to 1 (Yes) if you need the motor to run in the opposite direction from the current rotation.
In.30 V2 Quantizing (Quantizing)	Quantizing may be used when the noise level is high in the analog input (V2 terminal) signal. The frequency is output by measuring (quantizing) the height (value) of the input signal in a consistent interval. This means that the delicate control on the output frequency (power resolution) is low, but the noise is reduced, so it is suitable for systems that are sensitive to noise. Parameter values for quantizing refer to a percentage based on the maximum input. Therefore, if the value is set to 1% of the analog maximum input of 10 V and maximum frequency of 60 Hz, the output frequency will increase or decrease by 0.6 Hz per 0.1V difference.

Code and Features	Description
	To reduce the effect of the input signal changes (runout of height) on the operation frequency, the output frequency during increase or decrease of input signal value (height) is applied differently. When the input signal value increases, the output frequency starts changing if the height becomes equivalent to 3/4 of the quantizing value. From then on, the output frequency increases according to the quantizing value. On the other hand, when the input signal decrease, the output frequency starts decreasing if the height becomes equivalent to 1/4 of the quantizing value. Although the noise can be reduced using the low-pass filter (In.20), the response on the input signal takes long as the set value gets higher. Since it becomes difficult to control the frequency if the input signal is delayed, a period of long pulse (ripple) may occur on the output frequency. 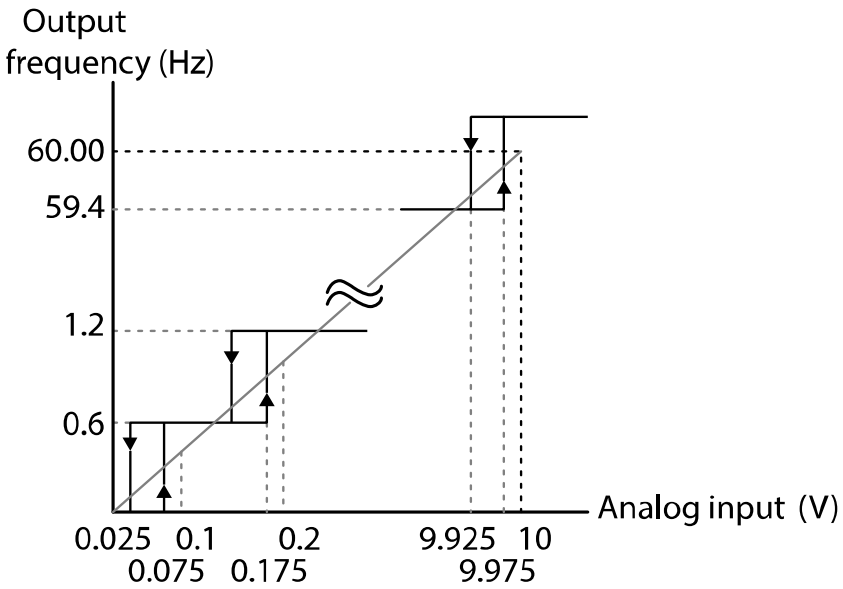

4.1.4.2 Setting a Frequency Reference for -10–10 V Input

Set the Frq (Frequency reference source) code in the Operation group to 3 (V2), and then set code 19 (V2 Polarity) to 1 (bipolar) in the Input Terminal group (IN). Use the output voltage from an external source to provide input to V2 (Frequency setting voltage terminal).

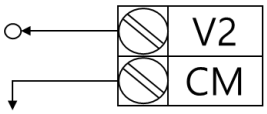

[Setting voltage of -10 –+10 V on a V2 terminal]

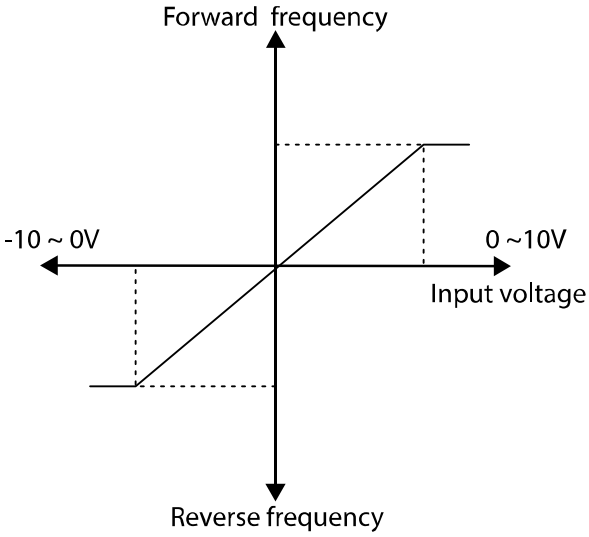

[Bipolar input voltage and output frequency]

Group	Code	Name	Setting		Setting Range	Unit
Operation	Frq	Frequency reference source	3	V2	0–9	-
In	01	Frequency for maximum analog input	60.00		0–Max Frequency	Hz
	18	V2 input voltage display	0.00		0.00–12.00 V	V
	19	V2 input polarity selection	1	Bipolar	0–1	-
	21	V2 Minimum input voltage	0.00		10.00–0.00 V	V

Group	Code	Name	Setting	Setting Range	Unit
	22	V2 output at Minimum voltage (%)	0.00	-100.00–0.00%	%
	23	V2 Maximum input voltage	-10.00	-12.00–0.00 V	V
	24	V2 output at Maximum voltage (%)	-100.00	-100.00–0.00%	%

Rotational Directions for Different Voltage Inputs

Operation command	Input voltage	
	0–10 V	-10–0 V
FWD	Fwd	Rev
REV	Rev	Fwd

-10–10 V Voltage Input Setting Details

Code and Features	Description
In.25 V2– volt x1– In.28 V2– Perc y2	Sets the gradient level and off-set value of the output frequency in relation to the input voltage. These codes are displayed only when In.19 is set to 1 (bipolar). For example, if the In.25 code is set to -2 V, In.26 code is set to 10%, In.27 code is set to -8 V, and In.28 code is set to 80%, the output frequency will vary within the range of 6–48 Hz. 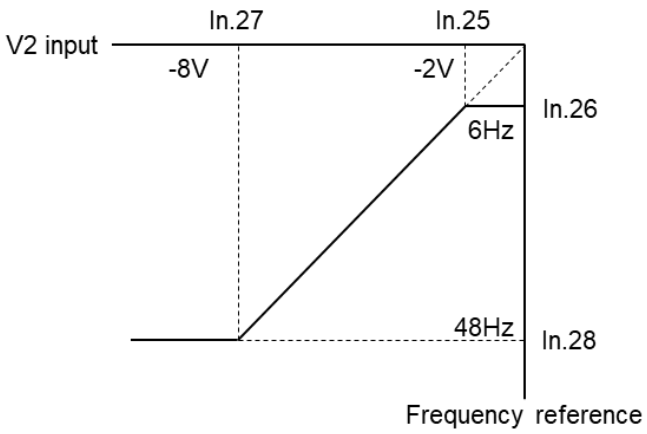 For details about the 0–+10 V analog inputs, refer to the code descriptions **In.21 V2 volt x1–In.24 V2 Perc y2** on page **84**.

4.1.5 Built-in Volume Input (V0) as the Source

You can modify the frequency reference by using the built-in volume dial. Go to the Frq (Frequency reference source) code in the Operation group and change the parameter value to 4, and then rotate the built-in volume dial. You can monitor the parameter setting of the frequency reference at the 0.00 (command frequency) code in the Operation group.

Group	Code	Name	Setting		Setting Range	Unit
Operation	Frq	Frequency reference source	4	V0	0–9	-
In	01	Frequency for maximum analog input	60.00		0–Max Frequency	Hz
	35	V0 input voltage display	0.00		0.00–5.00	V
	37	Time constant of V0 input filter	100		0–10000	ms
	38	V0 Minimum input voltage	0.00		0.00–5.00	V
	39	V0 output at minimum voltage (%)	0.00		0–100	%
	40	V0 Maximum input voltage	5.00		0.00–5.00	V
	41	V0 output at Maximum voltage (%)	100.00		0.00–100.00	%
	46	Changing rotation direction of V0	0	No	0–1	-
	47	V0 quantization level	0.04		0.00*, 0.04–10.00	%

4.1.6 Setting a Reference Frequency using Input Current (I2)

Input voltage to the I2 terminal of the control terminal block to set the frequency. Set the Frq (Frequency reference source) code in the Operation group to 5 (I2) and apply 4–20 mA input current to I2.

Group	Code	Name	Setting		Setting Range	Unit
Operation	Frq	Frequency reference source	5	I2	0–9	-
In	01	Frequency for maximum analog input	60.00		0–Max Frequency	Hz
	50	I2 input voltage display	0.00		0.00–20.00	mA
	52	Time constant of I2 input filter	100		0–10000	ms
	53	I2 minimum input current	4.00		0.00–20.00	mA
	54	I2 output at minimum current (%)	0.00		0–100	%

Group	Code	Name	Setting		Setting Range	Unit
	55	I2 maximum input current	20.00		0.00–20.00	mA
	56	I2 output at Maximum current (%)	100.00		0.00–100.00	%
	61	Changing rotation direction of I2	0	No	0–1	-
	62	I2 quantization level	0.04		0.00*, 0.04–10.00	%

* Quantizing is disabled if "0" is selected.

Input Current (I2) Setting Details

Code and Features	Description
In.01 Freq at 100%	Configures the frequency reference for operation at the maximum current (when In.56 is set to 100%). • If In.01 is set to 40.00, and default settings are used for In.53–56, 20 mA input current to the I2 terminal will produce a frequency reference of 40.00 Hz. • If In.56 is set to 50.00, and default settings are used for In.01 and In.53–55, 20 mA input current (max) to I2 will produce a frequency reference of 30.00 Hz.
In.50 I2 Monitor	Used to monitor input current at I2.
In.52 I2 Filter	Configures the time for the operation frequency to reach 63% of target frequency based on the input current at I2.
In.53 I2 Curr x1– In.56 I2 Perc y2	Configures the gradient level and off-set value of the output frequency. 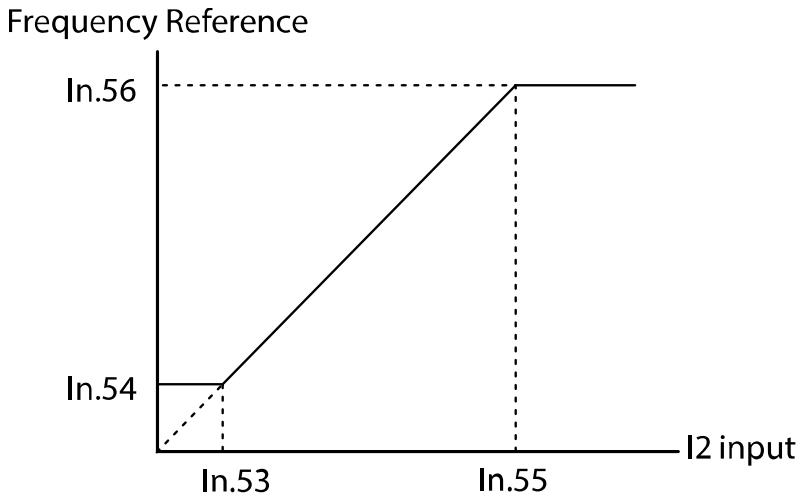

4.1.7 Frequency Reference Source Configuration for RS-485 Communication

Set the Frq (Frequency reference source) code in the Operation group to 6 (Int 485). Control the inverter with upper-level controllers, such as PCs or PLCs, via RS-485 communication by using RS-485 signal input terminals (S+/S-) of the control terminal block. Refer to **7 RS-485 Communication Features** on page **238** for more details.

Group	Code	Name	Setting		Setting Range	Unit
Operation	Frq	Frequency reference source	6	Int 485	0–9	-
CM	01	Built-in communication inverter ID	-	1	1–250	-
	02	Built-in communication protocol	0	ModBus RTU	0–2	-
			1	Reserved		
			2	LS INV 485		
	03	Built-in baud rate	3	9600 bps	0–7	-
	04	Built-in communication frame setting	0	D8/PN/S1	0–3	-
			1	Reserved		
			2	D8/PE/S1		
			3	D8/PO/S1		

4.2 Frequency Hold by Analog Input

If you set a frequency reference via analog input at the control terminal block, you can hold the operation frequency of the inverter by assigning a multi-function input as the analog frequency hold terminal. The operation frequency will be fixed upon an analog input signal.

Group	Code	Name	Setting		Setting Range	Unit
Operation	Frq	Frequency reference source	0	Keypad-1	0–9	-
			1	Keypad-2		
			2	V1		
			3	V2		
			4	V0		
			5	I2		
			6	Int 485		
			8	Fieldbus		
			9	UserSeqLink		
In	65–72	Px terminal setting options	21	Analog Hold	0–52	-

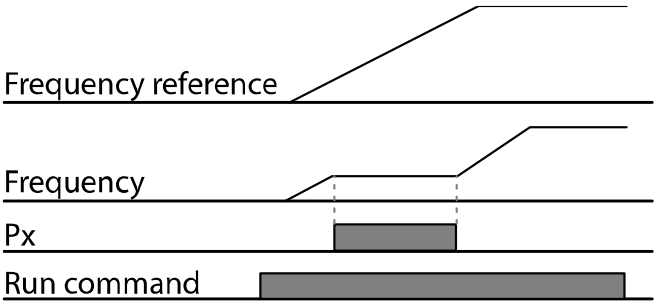

4.3 Multi-step Frequency Configuration

Multi-step operations can be carried out by assigning different speeds (or frequencies) to the Px terminals. Step 0 uses the frequency reference source set with the Frq code in the Operation group. Px terminal parameter values 7 (Speed-L), 8 (Speed-M) and 9 (Speed-H) are recognized as binary commands and work in combination with FX or RX run commands. The inverter operates according to the frequencies set with St.1–3 (multi-step frequency 1–3), bA.53–56 (multi-step frequency 4–7) and the binary command combinations.

Group	Code	Name	Setting		Setting Range	Unit
Operation	St1–St3	Multi-step frequency 1–3	-		0–Max Frequency	Hz
bA	53–56	Multi-step frequency 4–7	-		0–Max Frequency	Hz
In	65–72	Px terminal setting options	7	Speed-L	0–52	-
			8	Speed-M		-
			9	Speed-H		-
	89	Multi-step command delay time	1		1–5000	ms

Multi-step Frequency Setting Details

Code and Features	Description
Operation group St1–St3	Configure multi-step frequency 1–3.
bA.53–56 Step Freq - 4–7	Configure multi-step frequency 4–7.

<table>
<tr><th>Code and Features</th><th>Description</th></tr>
<tr><td>In.65–72
Px Define</td><td>Choose the P1-P8 terminals to setup as multi-step inputs, and then set the relevant codes (In.65–72) to 7 (Speed-L), 8 (Speed-M), or 9 (Speed-H).
Provided that terminals P3, P4 and P5 have been set to Speed-L, Speed-M and Speed-H respectively, the following multi-step operation will be available.
 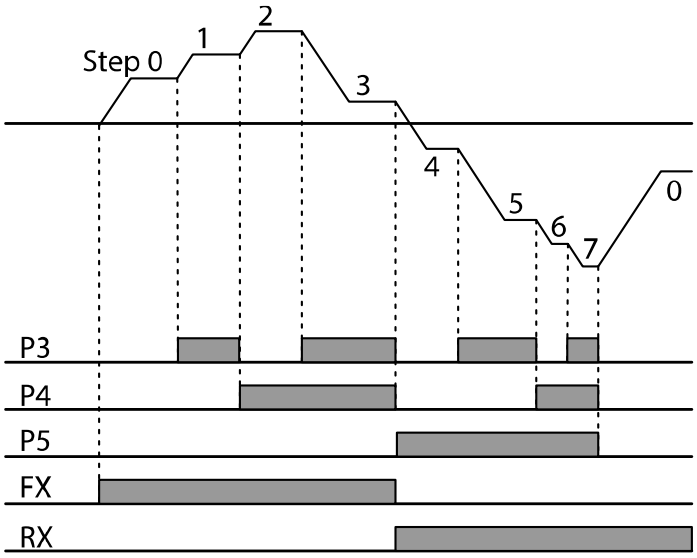

[An example of a multi-step operation]
<table>
<tr><th>Speed</th><th>FX/RX</th><th>P5</th><th>P4</th><th>P3</th></tr>
<tr><td>0</td><td>✓</td><td>-</td><td>-</td><td>-</td></tr>
<tr><td>1</td><td>✓</td><td>-</td><td>-</td><td>✓</td></tr>
<tr><td>2</td><td>✓</td><td>-</td><td>✓</td><td>-</td></tr>
<tr><td>3</td><td>✓</td><td>-</td><td>✓</td><td>✓</td></tr>
<tr><td>4</td><td>✓</td><td>✓</td><td>-</td><td>-</td></tr>
<tr><td>5</td><td>✓</td><td>✓</td><td>-</td><td>✓</td></tr>
<tr><td>6</td><td>✓</td><td>✓</td><td>✓</td><td>-</td></tr>
<tr><td>7</td><td>✓</td><td>✓</td><td>✓</td><td>✓</td></tr>
</table>
[An example of a multi-step speed]</td></tr>
<tr><td>In.89
In Check Time</td><td>Set the time for the inverter to check for other terminal block inputs. After adjusting In.89 to 100 ms and an input signal is received at P5, the inverter will search for inputs at other terminals for 100 ms, before proceeding to accelerate or decelerate based on P5’s configuration.</td></tr>
</table>

4.4 Command Source Configuration

Various devices can be selected as command input devices for the G100 inverter. Input devices available to select include keypad, multi-function input terminal, RS-485 communication, field bus adapter, and UserSeqLink.
When UserSeqLink is selected, it can be used as a frequency command by linking the common area with the output of the user sequence.

Group	Code	Name	Setting		Setting Range	Unit
Operation	drv	Command Source	0	Keypad	0–5	-
			1	FX/RX-1		
			2	FX/RX-2		
			3	Int 485		
			4	Fieldbus		
			5	UserSeqLink		

4.4.1 The Keypad as a Command Input Device

The keypad can be selected as a command input device to send command signals to the inverter. This is configured by setting the drv (command source) code to 0 (Keypad). Press the [RUN] key on the keypad to start an operation, and the [STOP/RESET] key to end it.

Group	Code	Name	Setting		Setting Range	Unit
Operation	drv	Command Source	0	Keypad	0–5	-

4.4.2 Terminal Block as a Command Input Device (Fwd/Rev Run Commands)

Multi-function terminals can be selected as a command input device. This is configured by setting the drv (command source) code in the Operation group to 1 (FX/RX-1). Select terminals for the forward and reverse operations from P1–P8 multi-function input terminals. Then select 1 (FX) and 2 (RX) respectively for 65–72 (Px terminal setting options) codes of the In group. This enables both terminals to be turned on or off at the same time, constituting a stop command that will cause the inverter to stop operation.

Group	Code	Name	Setting		Setting Range	Unit
Operation	drv	Command Source	1	FX/RX-1	0–5	-
In	65–72	Px terminal setting options	1	FX	0–52	-
			2	RX		

Fwd/Rev Command by Multi-function Terminal – Setting Details

Code and Features	Description
Operation group drv– Cmd Source	Set to 1 (FX/RX-1).
In.65–72 Px Define	Assign a terminal for forward (FX) operation. Assign a terminal for reverse (RX) operation.

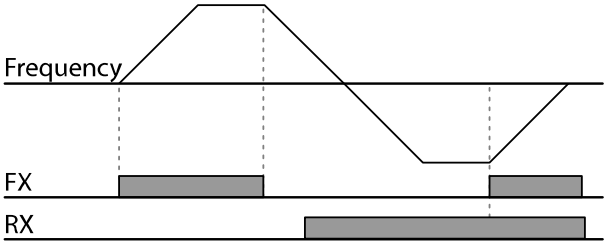

4.4.3 Terminal Block as a Command Input Device (Run and Rotation Direction Commands)

Set the drv (command source) code in the Operation group to 2 (FX/RX-2). Select terminals for the operation and rotation operations from P1–P8 multi-function input terminals. Then select 1 (FX) and 2 (RX) respectively for 65–72 (Px terminal setting options) codes of the In group. This enables both the FX terminal to be used as the operation command terminal and the RX terminal as the terminal to select the rotational direction (On: RX, Off: FX).

Group	Code	Name	Setting		Setting Range	Unit
Operation	drv	Command Source	2	FX/RX-2	0–5	-
In	65–72	Px terminal setting options	1	FX	0–52	-
			2	RX		

Run Command and Fwd/Rev Change Command Using Multi-function Terminal – Setting Details

Code and Features	Description
Operation group drv– Cmd Source	Set to 2 (FX/RX-2).
In.65–72 Px Define	Assign a terminal for run command (FX). Assign a terminal for changing rotation direction (RX).

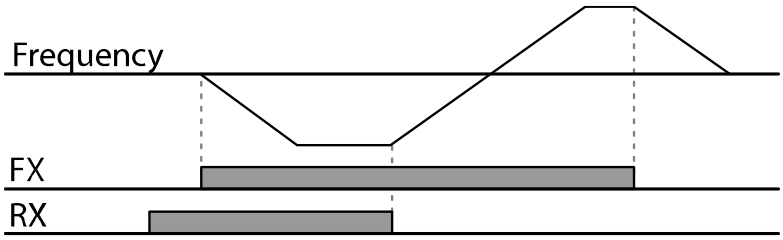

4.4.4 RS-485 Communication as a Command Input Device

Internal RS-485 communication can be selected as a command input device by setting the drv (command source) code in the Operation group to 3 (Int 485). Control the inverter with upper-level controllers, such as PCs or PLCs, via RS-485 communication by using RS-485 signal input terminals (S+/S-) of the control terminal block. Refer to **7 RS-485 Communication Features** on page **238** for more details.

Group	Code	Name	Setting		Setting Range	Unit
Operation	drv	Command Source	3	Int 485	0–5	-
CM	01	Built-in communication inverter ID	1		1–250	-
	02	Built-in communication protocol	0	ModBus RTU	0–2	-
	03	Built-in baud rate	3	9600 bps	0–7	-
	04	Built-in communication frame setting	0	D8/PN/S1	0–3	-

4.5 Forward or Reverse Run Prevention

The rotation direction of motors can be configured to prevent motors to only run in one direction.

Group	Code	Name	Setting		Setting Range	Unit
Ad	09	Run prevention options	0	None	0–2	-
			1	Forward Prev		
			2	Reverse Prev		

Forward/Reverse Run Prevention Setting Details

Code and Features	Description
Ad.09 Run Prevent	Choose a direction to prevent. Configuration / Function 0 None — Do not set run prevention. 1 Forward Prev — Set forward run prevention. 2 Reverse Prev — Set reverse run prevention.

4.6 Power-on Run

When the Power-on Run command is enabled and the terminal block operation command is ON for when there is a power supply to the inverter, it is started immediately. To enable power-on run set the drv (command source) code to 1 (FX/RX-1) or 2 (FX/RX-2) in the Operation group.

Group	Code	Name	Setting		Setting Range	Unit
Operation	drv	Command Source	1, 2	FX/RX-1 or FX/RX-2	0–5	-
Ad	10	Starting with power on	1	Yes	0–1	-

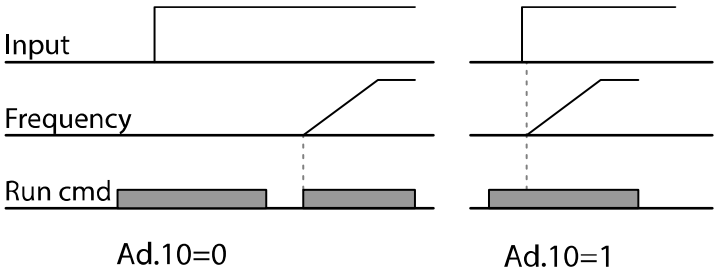

Note

- A fault trip may be triggered if the inverter starts operation while a motor's load (fan-type load) is in free-run state. To prevent this from happening, set bit4 to 1 in Cn.71 (speed search options) of the Control group. The inverter will perform a speed search at the beginning of the operation.
- If the speed search is not enabled, the inverter will begin its operation in a normal V/F pattern and accelerate the motor. If the inverter has been turned on without power-on run enabled, the terminal block command must first be turned off, and then turned on again to begin the inverter's operation.

Caution

Take caution on any safety accidents when operating the inverter with Power-on Run enabled as the motor will begin rotating as soon as the inverter starts up.

4.7 Reset and Restart

Reset and restart operations can be setup for inverter operation following a fault trip, based on the terminal block operation command (if it is configured). When a fault trip occurs, the inverter cuts off the output and the motor will free-run. Another fault trip may be triggered if the inverter begins its operation while motor load is in a free-run state.

Group	Code	Name	Setting		Setting Range	Unit
Operation	drv	Command Source	1, 2	FX/RX-1 or FX/RX-2	0–5	-
Pr	08	Selection of startup on trip reset	1	Yes	0–1	
	09	Number of automatic restarts	0		0–10	
	10	Auto restart delay time	1.0		0–60	sec

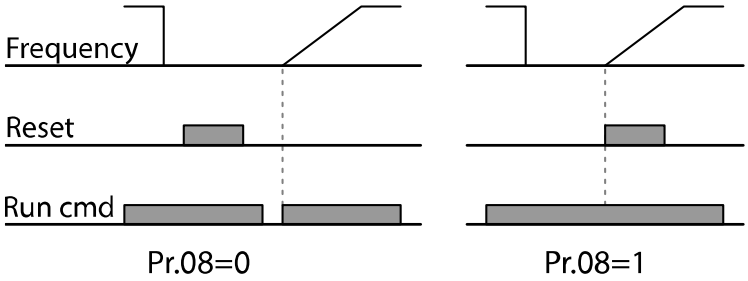

Note

- To prevent a repeat fault trip from occurring, set Cn.71 (speed search options) bit 2 to 1. The inverter will perform a speed search at the beginning of the operation.
- If the speed search is not enabled, the inverter will start its operation in a normal V/F pattern and accelerate the motor. If the inverter has been turned on without ‘Reset and Restart’ enabled, trips must be reset, then turn the terminal block command off and on to begin the inverter’s operation.

Caution

Take caution on any safety accidents when operating the inverter with Automatic Restart After Reset enabled as the motor will begin rotating as soon as the inverter is reset from the terminal block or keypad after a trip occurs.

4.8 Setting Acceleration and Deceleration Times

4.8.1 Acc/Dec Time Based on Maximum Frequency

Acc/Dec time values can be set based on maximum frequency, not on inverter operation frequency. To set Acc/Dec time values based on maximum frequency, set bA. 08 (Acc/Dec reference) in the Basic group to 0 (Max Freq).

Acceleration time set at the ACC (acceleration time) code in the Operation group (dr.03) refers to the time required for the inverter to reach the maximum frequency from a stopped (0 Hz) state. Likewise, the value set at the dEC (deceleration time) code in the Operation group (dr.04) refers to the time required to return to a stopped state (0 Hz) from the maximum frequency.

Group	Code	Name	Setting		Setting Range	Unit
Operation	ACC	Acceleration time	5.0		0.0–600.0	sec
	dEC	Deceleration time	10.0		0.0–600.0	sec
dr	20	Maximum frequency	60.00		40.00–400.00	Hz
bA	08	Acc/Dec reference frequency	0	Max Freq	0–1	-
	09	Time scale setting	1	0.1sec	0–2	-

Acc/Dec Time Based on Maximum Frequency – Setting Details

<table>
<tr><th>Code and Features</th><th>Description</th></tr>
<tr><td>bA.08
Ramp T Mode</td><td>Set the parameter value to 0 (Max Freq) to setup Acc/Dec time based on maximum frequency.

<table>
<tr><th colspan="2">Configuration</th><th>Function</th></tr>
<tr><td>0</td><td>Max Freq</td><td>Set the Acc/Dec time based on maximum frequency.</td></tr>
<tr><td>1</td><td>Delta Freq</td><td>Set the Acc/Dec time based on operation frequency.</td></tr>
</table>

If, for example, maximum frequency is 60.00 Hz, the Acc/Dec times are set to 5 seconds, and the frequency reference for operation is set at 30 Hz, the time required to reach 30 Hz therefore is 2.5 seconds.</td></tr>
</table>

<table>
<tr><th>Code and Features</th><th>Description</th></tr>
<tr><td></td><td> 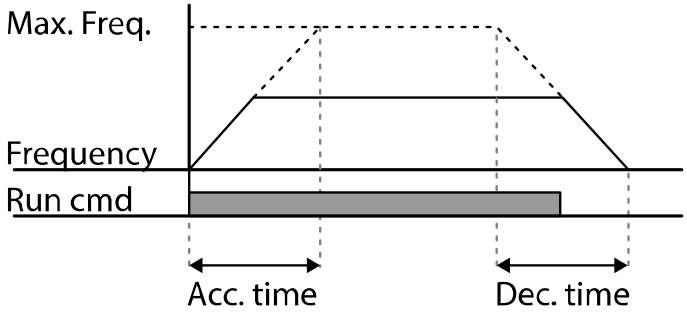
</td></tr>
<tr><td>bA.09
Time scale</td><td>Use the time scale for all time-related values. It is particularly useful when a more accurate Acc/Dec times are required because of load characteristics, or when the maximum time range needs to be extended.
<table>
<tr><th colspan="2">Configuration</th><th>Function</th></tr>
<tr><td>0</td><td>0.01sec</td><td>Sets 0.01 second as the minimum unit.</td></tr>
<tr><td>1</td><td>0.1sec</td><td>Sets 0.1 second as the minimum unit.</td></tr>
<tr><td>2</td><td>1sec</td><td>Sets 1 second as the minimum unit.</td></tr>
</table></td></tr>
</table>

Caution

Note that the range of maximum time values may change automatically when the units are changed. If for example, the acceleration time is set at 6000 seconds, a time scale change from 1 second to 0.01 second will result in a modified acceleration time of 60.00 seconds.

4.8.2 Acc/Dec Time Based on Operation Frequency

Acc/Dec times can be set based on the time required to reach the next step frequency from the existing operation frequency. To set the Acc/Dec time values based on the existing operation frequency, set bA. 08 (acc/dec reference) in the Basic group to 1 (Delta Freq).

Group	Code	Name	Setting		Setting Range	Unit
Operation	ACC	Acceleration time	5.0		0.0–600.0	sec
	dEC	Deceleration time	10.0		0.0–600.0	sec
bA	08	Acc/Dec reference frequency	1	Delta Freq	0–1	-

Acc/Dec Time Based on Operation Frequency – Setting Details

<table>
<tr><th>Code and Features</th><th>Description</th></tr>
<tr><td>bA.08
Ramp T Mode</td><td>Set the parameter value to 1 (Delta Freq) to set Acc/Dec times based on Operation frequency.
<table>
<tr><th colspan="2">Configuration</th><th>Function</th></tr>
<tr><td>0</td><td>Max Freq</td><td>Set the Acc/Dec time based on maximum frequency.</td></tr>
<tr><td>1</td><td>Delta Freq</td><td>Set the Acc/Dec time based on operation frequency.</td></tr>
</table>
If Acc/Dec times are set to 5 seconds, and multiple frequency references are used in the operation in 2 steps, at 10 Hz and 30 Hz, the time to accelerate will be as follows.
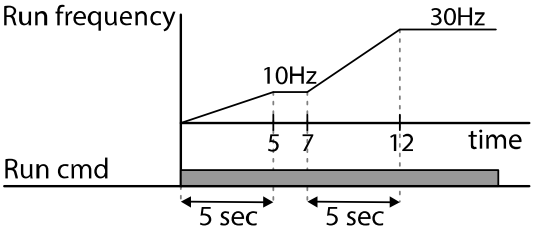
</td></tr>
</table>

4.8.3 Multi-step Acc/Dec Time Configuration

Acc/Dec times can be configured via a multi-function terminal by setting the ACC (acceleration time) and dEC (deceleration time) codes in the Operation group.

Group	Code	Name	Setting		Setting Range	Unit
Operation	ACC	Acceleration time	5.0		0.0–600.0	sec
	dEC	Deceleration time	10.0		0.0–600.0	sec
bA	70–82	Multi-step acceleration time 1–7	0.0		0.0–600.0	sec
	71–83	Multi-step deceleration time 1–7	0.0		0.0–600.0	sec
In	65–72	Px terminal setting options	11	XCEL-L	0–52	-
			12	XCEL-M		
			49	XCEL-H		
	89	Multi-step command delay time	1		1–5000	ms

Acc/Dec Time Setup via Multi-function Terminals – Setting Details

<table>
<tr><th>Code and Features</th><th>Description</th></tr>
<tr><td>bA. 70–82
Acc Time 1–7</td><td>Set multi-step acceleration time 1–7.</td></tr>
<tr><td>bA.71–83
Dec Time 1–7</td><td>Set multi-step deceleration time 1–7.</td></tr>
<tr><td>In.65–72
Px Define
(P1–P8)</td><td>Choose and configure the terminals to use for multi-step Acc/Dec time inputs.
<table>
<tr><th colspan="2">Configuration</th><th>Function</th></tr>
<tr><td>11</td><td>XCEL-L</td><td>Acc/Dec command-L</td></tr>
<tr><td>12</td><td>XCEL-M</td><td>Acc/Dec command-M</td></tr>
<tr><td>49</td><td>XCEL-H</td><td>Acc/Dec command-H</td></tr>
</table>
Acc/Dec commands are recognized as binary code inputs and will control the acceleration and deceleration based on parameter values set with bA.70–82 and bA.71–83.

If, for example, the P4 and P5 terminals are set as XCEL-L and XCEL-M respectively, the following operation will be available.
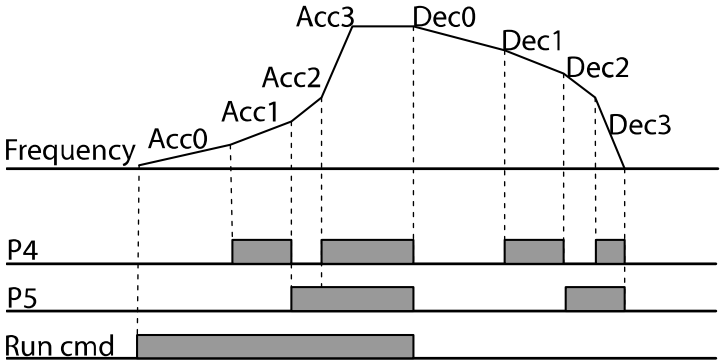

<table>
<tr><th>Acc/Dec time</th><th>P5</th><th>P4</th></tr>
<tr><td>0</td><td>-</td><td>-</td></tr>
<tr><td>1</td><td>-</td><td>✓</td></tr>
<tr><td>2</td><td>✓</td><td>-</td></tr>
<tr><td>3</td><td>✓</td><td>✓</td></tr>
</table>
[Configuration of multi-function terminals P4 and P5]</td></tr>
<tr><td>In.89
In Check Time</td><td>Set the time for the inverter to check for other terminal block inputs. In.89 is set to 100 ms and a signal is supplied to the P4 terminal, the inverter searches for other inputs over the next 100 ms. When the time expires, the Acc/Dec time will be set based on the input received at P4.</td></tr>
</table>

4.8.4 Acc/Dec Time Switch Frequency

You can set a switch frequency for the Acc/Dec time to change the Acc/Dec gradients without configuring the multi-function terminals.

Group	Code	Name	Setting	Setting Range	Unit
Operation	ACC	Acceleration time	5.0	0.0–600.0	sec
	dEC	Deceleration time	10.0	0.0–600.0	sec
bA	70	Multi-step acceleration time 1	20.0	0.0–600.0	sec
	71	Multi-step deceleration time 1	20.0	0.0–600.0	sec
Ad	60	Acc/Dec time transition frequency	30.00	0–Max Frequency	Hz

Acc/Dec Time Switch Frequency Setting Details

Code and Features	Description
Ad.60 Xcel Change Fr	After the Acc/Dec switch frequency has been set, Acc/Dec gradients configured at bA.70 and 71 will be used when the inverter's operation frequency is at or below the switch frequency. If the operation frequency exceeds the switch frequency, the configured gradient level, configured for the ACC and dEC codes, will be used. If you configure the P1–P8 multi-function input terminals for multi-step Acc/Dec gradients (XCEL-L, XCEL-M, XCEL-H), the inverter will operate based on the Acc/Dec inputs at the terminals instead of the Acc/Dec switch frequency configurations.

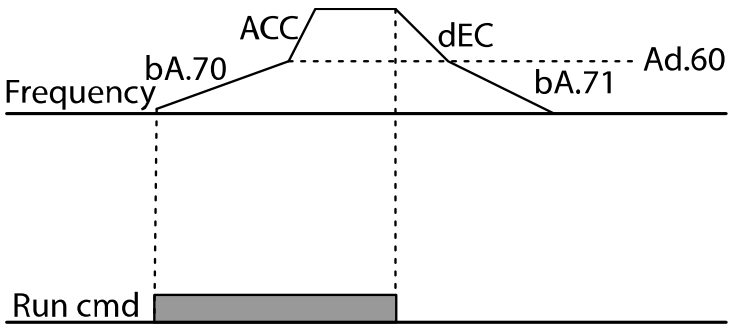

4.9 Acc/Dec Pattern Configuration

Acc/Dec gradient level patterns can be configured to enhance and smooth the inverter's acceleration and deceleration curves. Linear pattern features a linear increase or decrease to the output frequency, at a fixed rate. For an S-curve pattern a smoother and more gradual increase or decrease of output frequency, ideal for lift-type loads or elevator doors, etc. S-curve gradient level can be adjusted using codes Ad. 03–06 in the Advanced group.

Group	Code	Name	Setting		Setting Range	Unit
bA	08	Acc/Dec reference frequency	0	Max Freq	0–1	-
Ad	01	Acceleration pattern	0	Linear	0–1	-
	02	Deceleration pattern	1	S-curve		-
	03	S-curve acceleration start point gradient	40		1–100	%
	04	S-curve acceleration end point gradient	40		1–100	%
	05	S-curve deceleration start point gradient	40		1–100	%
	06	S-curve deceleration end point gradient	40		1–100	%

Acc/Dec Pattern Setting Details

Code and Features	Description
Ad.03 Acc S Start	If the acc/dec pattern is set as the S-curve, set the gradient level (slant) for the acceleration start time. Gradient level is the ratio which gradient acceleration takes up in the section under 1/2 frequency based on the 1/2 frequency of target frequency. If the frequency reference and maximum frequency are set at 60 Hz and Ad.03 is set to 50%, 0–15 Hz section will conduct curve acceleration and the 15-30 Hz section will conduct linear acceleration when the S-curve accelerates up to 30 Hz.
Ad.04 Acc S End	Set the gradient level for when the operation frequency reaches the target frequency. The curve ratio is the ratio that the curve acceleration takes place within the section above the 1/2 frequency, based on the 1/2 frequency of the frequency reference. If the setting is set identical to the Ad.03 Acc S Start example, the 30–45 Hz section will conduct linear acceleration. The 45–60 Hz section will first conduct curve acceleration then conduct at a constant speed.
Ad.05 Dec S Start – Ad.06 Dec S End	Sets the rate of S-curve deceleration. The setup method is the same as the ratio during acceleration.

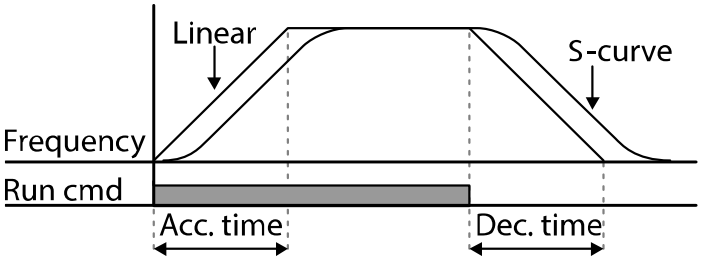

[Acceleration / deceleration pattern configuration]

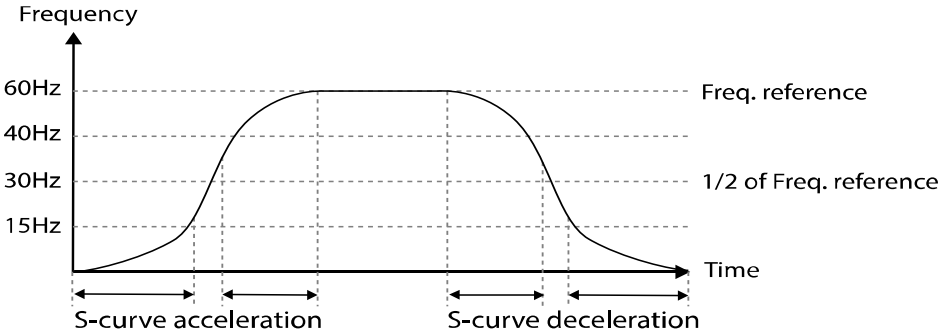

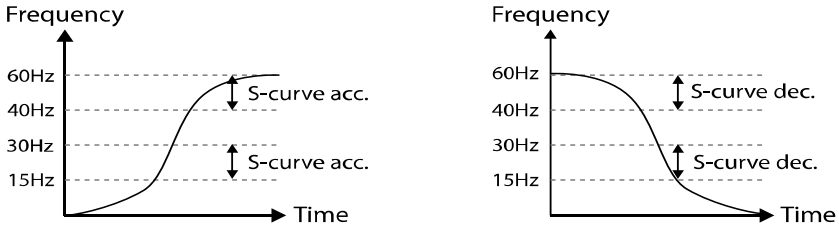

[Acceleration / deceleration S-curve pattern configuration]

Note

The Actual Acc/Dec time during an S-curve application
Actual acceleration time = user-configured acceleration time + user-configured acceleration time x starting gradient level/2 + user-configured acceleration time x ending gradient level/2.
Actual deceleration time = user-configured deceleration time + user-configured deceleration time x starting gradient level/2 + user-configured deceleration time x ending gradient level/2.
If the S-curve reference acceleration time exceeds 60 seconds based on the maximum frequency, the S-curve is accelerated and decelerated linearly without performing the S-curve.

Caution

Note that actual Acc/Dec times become greater than user defined Acc/Dec times when S-curve Acc/Dec patterns are in use.

4.10 Stopping the Acc/Dec Operation

Configure the multi-function input terminals to stop acceleration or deceleration and operate the inverter at a fixed frequency.

Group	Code	Name	Setting		Setting Range	Unit
In	65—72	Px terminal setting options	25	XCEL Stop	0–52	-

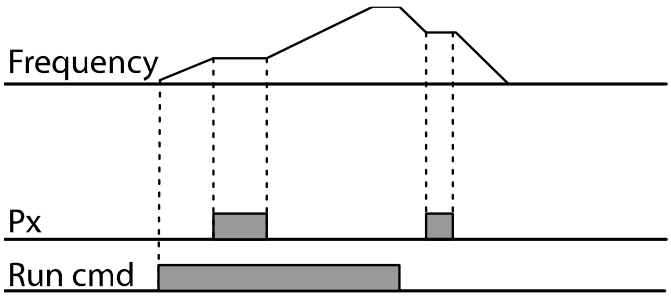

4.11 V/F Control

Configure the inverter's output voltages, gradient levels and output patterns to achieve a target output frequency with V/F control. The amount of torque boost used during low frequency operations can also be adjusted.

4.11.1 Linear V/F Pattern Operation

A linear V/F pattern configures the inverter to increase or decrease the output voltage at a fixed rate for different operation frequencies based on V/F characteristics. Used for loads that require constant torque regardless of the frequency.

Group	Code	Name	Setting		Setting Range	Unit
dr	09	Control mode	0	V/F	0–4	-
	18	Base frequency	60.00		30.00–400.00	Hz
	19	Start frequency	0.50		0.01–10.00	Hz
bA	07	V/F pattern	0	Linear	0–3	-

Linear V/F Pattern Setting Details

Code and Features	Description
dr.18 Base Freq	Sets the base frequency. A base frequency is the inverter's output frequency when running at its rated voltage. Refer to the motor's rating plate to set this parameter value.
dr.19 Start Freq	Sets the start frequency. A start frequency is a frequency at which the inverter starts voltage output. The inverter does not produce output voltage while the frequency reference is lower than the set frequency. However, if a deceleration stop is made while operating above the start frequency, output voltage will continue until the operation frequency reaches a full-stop. 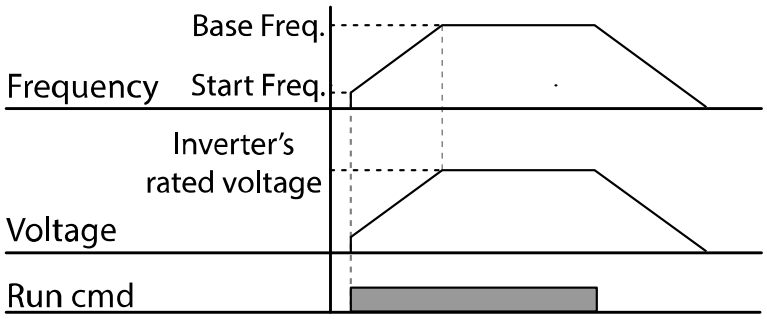

4.11.2 Square Reduction V/F Pattern Operation

Square reduction V/F pattern is ideal for loads such as fans and pumps. It provides non-linear acceleration and deceleration patterns to sustain torque throughout the whole frequency range.

Group	Code	Name	Setting		Setting Range	Unit
bA	07	V/F pattern	1	Square	0–3	-
			3	Square2		

Square Reduction V/F Pattern Operation - Setting Details

Code and Features	Description
bA.07 V/F Pattern	Sets the parameter value to 1 (Square) or 3 (Square2) according to the load's start characteristics. Configuration: 1 Square — The inverter produces output voltage proportional to 1.5 square of the operation frequency. Configuration: 3 Square 2 — The inverter produces output voltage proportional to 2 square of the operation frequency. This setup is ideal for variable torque loads such as fans or pumps.

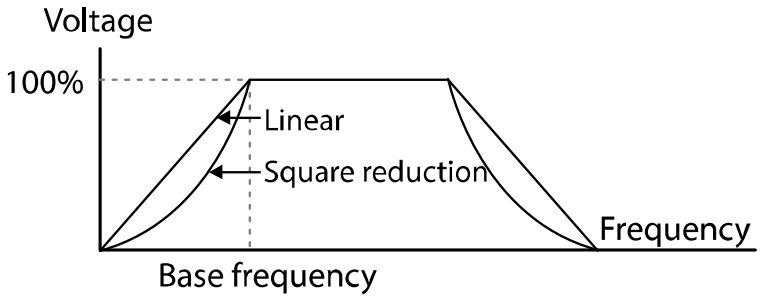

4.11.3 User V/F Pattern Operation

The inverter allows the configuration of user-defined V/F patterns to suit the load characteristics of special motors.

Group	Code	Name	Setting	Setting Range	Unit
bA	07	V/F pattern	2 User V/F	0–3	-
	41	User Frequency 1	15.00	0–Max Frequency	Hz
	42	User Voltage 1	25	0–100	%
	43	User Frequency 2	30.00	0–Max Frequency	Hz
	44	User Voltage 2	50	0–100	%
	45	User Frequency 3	45.00	0–Max Frequency	Hz
	46	User Voltage 3	75	0–100	%
	47	User Frequency 4	Maximum frequency	0–Max Frequency	Hz
	48	User Voltage 4	100	0–100%	%

User V/F Pattern Setting Details

Code and Features	Description
bA.41 User Freq 1 – bA.48 User Volt 4	Select the arbitrary frequency between the start and the maximum frequencies to set the user frequency (User Freq x). Also set the voltage to correspond to each frequency in user voltage (User Volt x).

The 100% output voltage in the figure below is based on the parameter settings of bA.15 (motor rated voltage). If bA.15 is set to 0, it will be based on the input voltage.

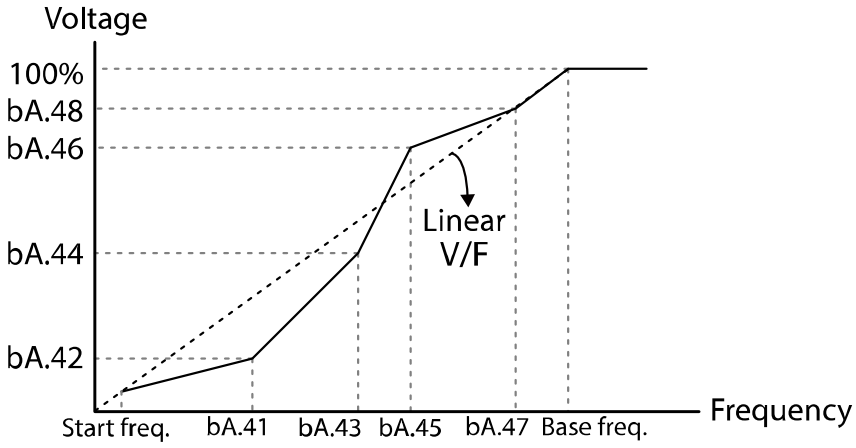

Caution

- When a normal induction motor is in use, care must be taken not to configure the output pattern away from a linear V/F pattern. Non-linear V/F patterns may cause insufficient motor torque or motor overheating due to over-excitation.
- When a user V/F pattern is in use, forward torque boost (dr.16) and reverse torque boost (dr.17) do not operate.

4.12 Torque Boost

4.12.1 Manual Torque Boost

Manual torque boost enables users to adjust output voltage during low speed operation or motor start. Increase low speed torque or improve motor starting properties by manually increasing output voltage. Configure manual torque boost while running loads that require high starting torque, such as lift-type loads.

Group	Code	Name	Setting		Setting Range	Unit
dr	15	Torque boost mode	0	Manual	0–1	-
	16	Forward Torque boost	2.0		0.0–15.0	%
	17	Reverse torque boost	2.0		0.0–15.0	%

Manual Torque Boost Setting Details

Code and Features	Description
dr.16 Fwd Boost	Set torque boost for forward operation.
dr.17 Rev Boost	Set torque boost for reverse operation.

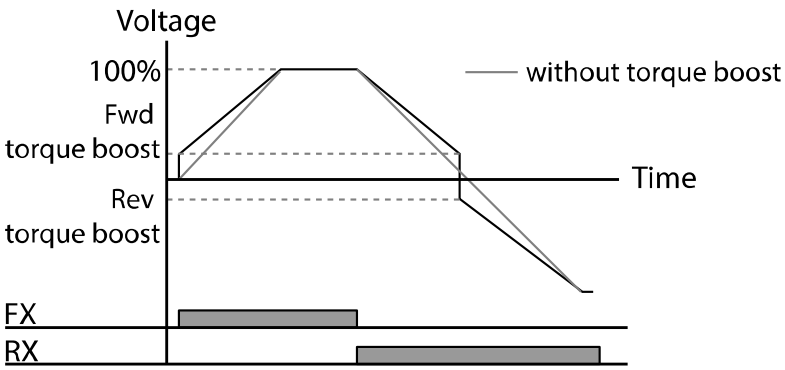

Caution

Excessive torque boost will result in over-excitation and motor overheating.

4.12.2 Auto Torque Boost

In V/F operation, this adjusts the output voltage if operation is unavailable due to a low output voltage. It is used when operation is unavailable, due to a lack of starting torque, by providing a voltage boost to the output voltage via the torque current.

Group	Code	Name	Setting		Setting Range	Unit
dr	15	Torque boost mode	1	Advanced Auto	0–1	-
dr	26	Auto torque boost filter gain	2		1–1000	-
dr	27	Auto torque boost motoring voltage gain	50.0		0.0–300.0	%
dr	28	Auto torque boost regeneration voltage gain	50.0		0.0–300.0	%

You can use the parameter value displayed on the motor's rating plate without motor parameter tuning. Use after entering the value recorded on the motor's rating plate in dr.18 (base frequency), bA.12 (motor's rated slip frequency), bA.13 (motor's rated current), and bA.14 (motor's no load current). If you do not use the value displayed on the motor's rating plate, each parameter value is set to the initial value and some features may be limited.

In V/F operation, this adjusts the output voltage if operation is unavailable due to a low output voltage. Use when it cannot be started due to the lack of the starting torque as a method to output voltage by adding the voltage boost quantity calculated by using torque current on the manual torque boost quantity (dr.16, dr.17). If the run direction is forward, dr.16 forward torque boost quantity is applied. If the direction is reverse, dr17 reverse torque boost quantity is applied. As the values to adjust the amount of compensation according to the load, dr.27 and dr.28 automatic torque boost voltage gain can be adjusted and used when there is a lack of starting torque or when excessive current is flowing.

If number 1 (automatic torque boost) is selected from the dr.15 code of drive (dr) group, dr.26, dr.27, and dr.28 parameters can be corrected and the inverter outputs voltage according to the torque boost quantity.

4.13 Motor Output Voltage Adjustment

Output voltage settings are required when a motor's rated voltage differs from the input voltage to the inverter. Set the voltage value to configure the motor's rated operating voltage. The set voltage becomes the output voltage of the inverter's base frequency. If bA.15 (motor rated voltage) is set to 0, the inverter corrects the output voltage based on the input voltage in the stopped condition. If the frequency is higher than the base frequency, when the input voltage is lower than the parameter setting, the input voltage will be the inverter output voltage.

Group	Code	Name	Setting	Setting Range	Unit
bA	15	Motor rated voltage	0	0, 100-480	V

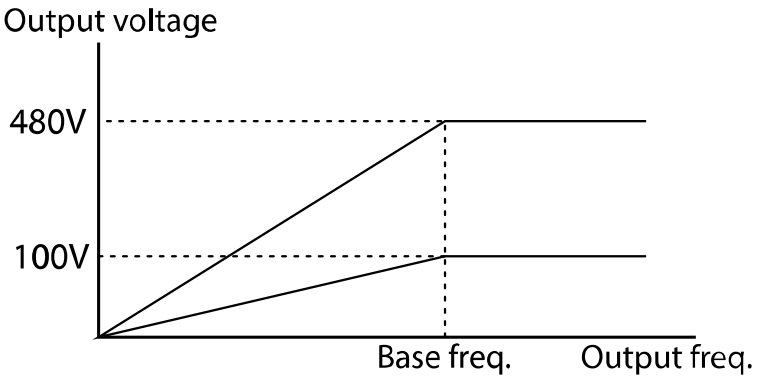

4.14 Start Mode Setting

Select the start mode to use when the operation command is input with the motor in the stopped condition.

4.14.1 Accelerating Start

Acceleration start is a general acceleration mode. If there are no extra settings applied, the motor accelerates directly to the frequency reference when the command is input.

Group	Code	Name	Setting		Setting Range	Unit
Ad	07	Start Mode	0	Acc	0–1	-

4.14.2 DC Braking After Start

This start mode supplies a DC voltage for a set amount of time to provide DC braking before an inverter starts to accelerate a motor. If the motor continues to rotate due to its inertia, DC braking will stop the motor, allowing the motor to accelerate from a stopped condition. DC braking can also be used with a mechanical brake connected to a motor shaft, if a constant torque is required after the mechanical brake is released. The function to start after DC braking will not operate if the control mode is set to IM Sensorless.

Group	Code	Name	Setting		Setting Range	Unit
Ad	07	Start Mode	1	Dc-Start	0–1	-
	12	Start DC braking time	0.00		0.00–60.00	sec
	13	Amount of applied DC	50		0-Rated Current of Inverter/Rated Current of Motor x 100%	%

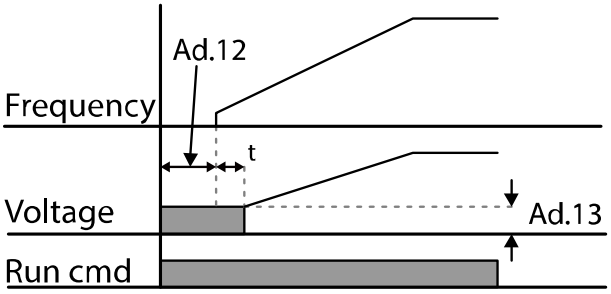

Caution

The amount of DC braking required is based on the motor's rated current. If the DC braking resistance is too high or brake time is too long, the motor may overheat or be damaged. The maximum value of the amount of applied DC is limited to the inverter rated current.

4.14.3 Initial Excitation of Stop Status (Pre-excite)

Use to apply the exciting current to the motor under a stop status. If you enter the multi-function input signal set with the initial excitation signal, DC voltage will be supplied to the motor.

Group	Code	Name	Setting		Setting Range	Unit
Ad	13	Amount of applied DC	50		0-Rated Current of Inverter/Rated Current of Motor x 100%	%
In	65–72	Px terminal setting options	34	Pre excite	-	-

Caution

The amount of DC braking required is based on the motor's rated current. If the DC braking resistance is too high or brake time is too long, the motor may overheat or be damaged. The maximum value of the amount of applied DC is limited to the inverter rated current.

4.15 Stop Mode Setting

Select a stop mode to stop the inverter operation.

4.15.1 Deceleration Stop

Deceleration stop is a general stop mode. If there are no extra settings applied, the motor decelerates down to 0 Hz and stops, as shown in the figure below.

Group	Code	Name	Setting		Setting Range	Unit
Ad	08	Stop Mode	0	Dec	0–4	-

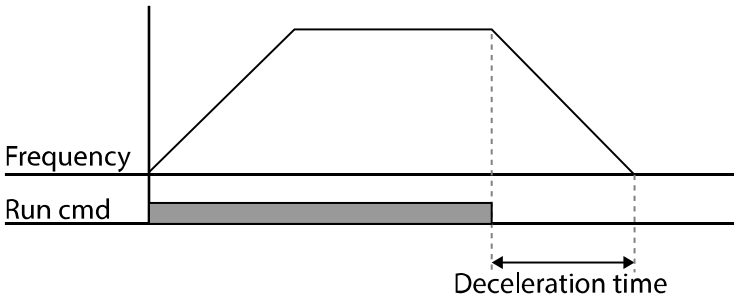

4.15.2 DC Braking After Stop

When the operation frequency reaches the set value during deceleration (DC braking frequency), the inverter stops the motor by supplying DC power to the motor. With a stop command input, the inverter begins decelerating the motor. When the frequency reaches the DC braking frequency set at Ad.17, the inverter supplies DC voltage to the motor and stops it.

Group	Code	Name	Setting	Setting Range	Unit
Ad	08	Stop Mode	1 Dc-brake	0–4	-
	14	Output block time before braking	0.10	0.00–60.00	sec
	15	DC braking time	1.00	0–60	sec
	16	DC braking rate	50	0-Rated Current of Inverter/Rated Current of Motor x 100%	%
	17	DC braking frequency	5.00	0.00–60.00	Hz

DC Braking After Stop Setting Details

Code and Features	Description
Ad.14 Dc-Block Time	Set the time to block the inverter output before DC braking. If the inertia of the load is great, or if DC braking frequency (Ad.17) is set too high, a fault trip may occur due to overcurrent conditions when the inverter supplies DC voltage to the motor. Prevent overcurrent fault trips by adjusting the output block time before DC braking.
Ad.15 Dc-Brake Time	Set the time duration for the DC voltage supply to the motor.
Ad.16 Dc-Brake Level	Set the amount of DC braking to apply. The parameter setting is based on the rated current of the motor. The maximum value of the DC braking rate is limited as an inverter rated current. Maximum Value of Dc-Brake Level = Rated Current of Inverter/Rated Current of Motor x 100%
Ad.17 Dc-Brake Freq	Set the frequency to start DC braking. When the frequency is reached, the inverter starts deceleration. If the dwell frequency is set lower than the DC braking frequency, dwell operation will not work and DC braking will start instead.

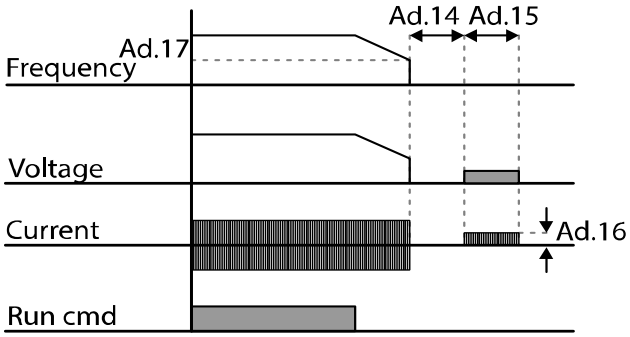

Caution

- Note that the motor can overheat or be damaged if an excessive amount of DC braking is applied to the motor, or DC braking time is set too long.
- The motor can be overheated or damaged. The maximum value of DC braking is limited to the rated current of the inverter.

4.15.3 Free Run Stop

When the Operation command is off, the inverter output turns off, and the load stops due to residual inertia.

Group	Code	Name	Setting		Setting Range	Unit
Ad	08	Stop Mode	2	Free-Run	0–4	-

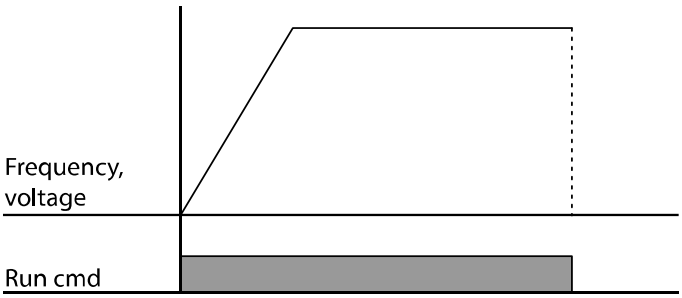

Caution

Note that when there is high inertia on the output side and the motor is operating at high speed, the load's inertia will cause the motor to continue rotating even if the inverter output is blocked.

4.15.4 Power Braking

When the inverter's DC voltage rises above a specified level due to motor regenerated energy, a control is made to either adjust the deceleration gradient level or reaccelerate the motor in order to reduce the regenerated energy. Power braking can be used when short deceleration times are needed without braking resistors, or when optimum deceleration is needed without causing an over voltage fault trip.

Group	Code	Name	Setting		Setting Range	Unit
Ad	08	Stop Mode	4	Power Braking	0–4	-

Caution

- To prevent overheating or damaging the motor, do not apply power braking to the loads that require frequent deceleration.
- Stall prevention and power braking only operate during deceleration, and power braking takes priority over stall prevention. In other words, when both bit3 of Pr.50 (stall prevention and flux braking) and Ad.08 (power braking) are set, power braking will take precedence and operate.
- Note that if deceleration time is too short or inertia of the load is too great, an overvoltage fault trip may occur.
- Note that if a free run stop is used, the actual deceleration time can be longer than the pre-set deceleration time.

4.16 Frequency Limit

Operation frequency can be limited by setting maximum frequency, start frequency, upper limit frequency and lower limit frequency.

4.16.1 Frequency Limit Using Maximum Frequency and Start Frequency

Group	Code	Name	Setting	Setting Range	Unit
dr	19	Start frequency	0.50	0.01–10.00	Hz
	20	Maximum frequency	60.00	40.00–400.00	Hz

Frequency Limit Using Maximum Frequency and Start Frequency - Setting Details

Code and Features	Description
dr.19 Start Freq	Set the lower limit value for speed unit parameters that are expressed in Hz or rpm. If an input frequency is lower than the start frequency, the parameter value will be 0.00.
dr.20 Max Freq	Set upper and lower frequency limits. All frequency selections are restricted to frequencies from within the upper and lower limits. This restriction also applies when you input a frequency reference using the keypad.

4.16.2 Frequency Limit Using Upper and Lower Limit Frequency Values

Group	Code	Name	Setting		Setting Range	Unit
Ad	24	Frequency limit	0	No	0–1	-
	25	Frequency lower limit value	0.50		0.0–maximum frequency	Hz
	26	Frequency upper limit value	Maximum frequency		Lower limit–maximum frequency	Hz

Frequency Limit Using Upper and Lower Limit Frequencies - Setting Details

Code and Features	Description
Ad.24 Freq Limit	The initial setting is 0 (No). When the setting is changed to 1 (Yes), the frequency can be set only between the lower limit frequency (Ad.25) and the upper limit frequency (Ad.26). When the setting is 0 (No), codes Ad.25 and Ad.26 are not visible.
Ad.25 Freq Limit Lo, Ad.26 Freq Limit Hi	Set an upper limit frequency to all speed unit parameters that are expressed in Hz or rpm, except for the base frequency (dr.18). Frequency cannot be set higher than the upper limit frequency.

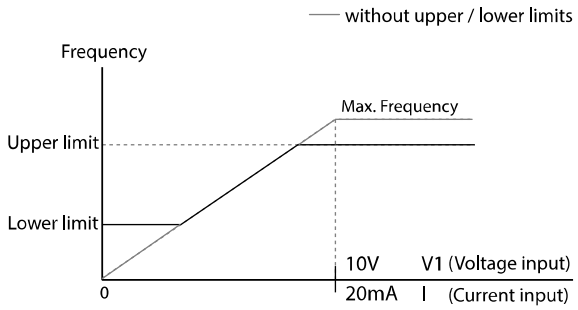

4.16.3 Frequency Jump

Use frequency jump to avoid mechanical resonance frequencies. Jump through frequency bands when a motor accelerates and decelerates. Operation frequencies cannot be set within the pre-set frequency jump band.

When a frequency setting is increased, while the frequency parameter setting value (voltage, current, RS-485 communication, keypad setting, etc.) is within a jump frequency band, the frequency will be maintained at the lower limit value of the frequency band. Then, the frequency will increase when the frequency parameter setting exceeds the range of frequencies used by the frequency jump band.

Group	Code	Name	Setting	Setting Range	Unit
Ad	27	Frequency jump	0 No	0–1	-
	28	Jump frequency lower limit 1	10.00	0.00–Jump frequency upper limit 1	Hz
	29	Jump frequency upper limit 1	15.00	Jump frequency lower limit 1–Maximum frequency	Hz
	30	Jump frequency lower limit 2	20.00	0.00–Jump frequency upper limit 2	Hz
	31	Jump frequency upper limit 2	25.00	Jump frequency lower limit 2–Maximum frequency	Hz
	32	Jump frequency lower limit 3	30.00	0.00–Jump frequency upper limit 3	Hz
	33	Jump frequency upper limit 3	35.00	Jump frequency lower limit 3–Maximum frequency	Hz

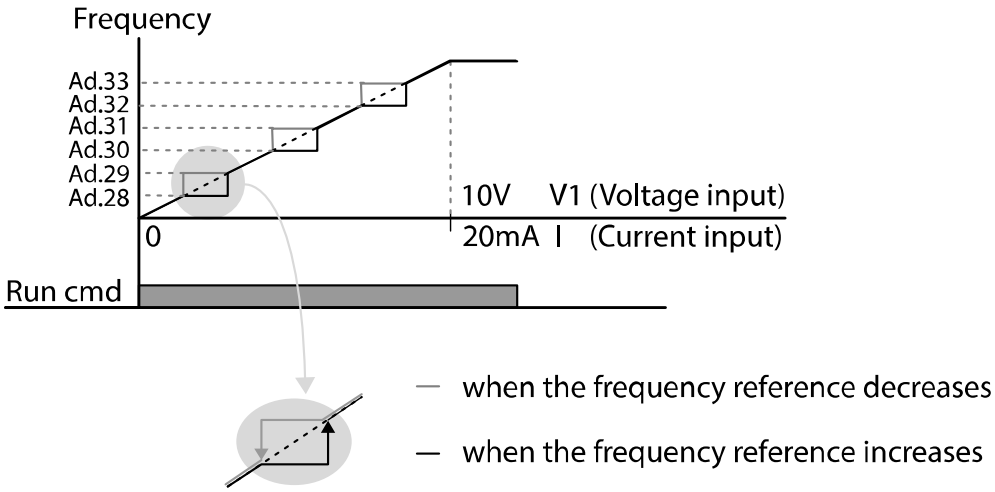

4.17 2nd Operation Mode

Apply two types of operation modes and switch between them as required. For both the first and second command source, set the frequency after shifting operation commands to the multi-function input terminal. Mode switching can be used to stop remote control during an operation using the communication option and to switch operation mode to operate via the local panel, or to operate the inverter from another remote control location.

Select one of the multi-function terminals from codes In.65–72 and set the parameter value to 15 (2nd Source).

Group	Code	Name	Setting		Setting Range	Unit
Operation	drv	Command Source	1	FX/RX-1	0–5	-
	Frq	Frequency reference source	2	V1	0–9	-
bA	04	2nd command source	0	Keypad	0–5	-
	05	2nd frequency source	0	KeyPad-1	0–9	-
In	65–72	Px terminal setting options	15	2nd Source	0–52	-

2nd Operation Mode Setting Details

Code and Features	Description
bA.04 Cmd 2nd Src bA.05 Freq 2nd Src	If signals are provided to the multi-function terminal set as the 2nd command source (2nd Source), the operation can be performed using the set values from bA.04–05 instead of the set values from the drv and Frq codes in the Operation group. The 2nd command source settings cannot be changed while operating with the 1st command source (Main Source).

Caution

- When setting the multi-function terminal to the 2nd command source (2nd Source) and input (On) the signal, operation state is changed because the frequency setting and the Operation command will be changed to the 2nd command. Before shifting input to the multi-function terminal, ensure that the 2nd command is correctly set. Note that if the deceleration time is too short or inertia of the load is too high, an overvoltage fault trip may occur.
- Depending on the parameter settings, the inverter may stop operating when you switch the command modes.

4.18 Multi-Function Input Terminal Control

Filter time constants and the type of multi-function input terminals can be configured to improve the response of input terminals.

Group	Code	Name	Setting	Setting Range	Unit
In	85	Multi-function input terminal On filter	10	0–10000	ms
	86	Multi-function input terminal Off filter	3	0–10000	ms
	87	Multi-function input terminal selection	0 0000*	-	-
	88	NO/NC selection of operation command	0	0–1	-
	90	Multi-function input terminal status	0 0000*	-	-

* Displayed as 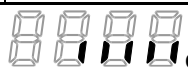 on the keypad.

Multi-Function Input Terminal Control Setting Details

Code and Features	Description
In.84 DI Delay Sel	Select whether or not to activate the time values set at In.85 and In.86. If deactivated, the time values are set to the default values at In.85 and In.86. If activated, the set time values at In.85 and In.86 are set to the corresponding terminals. Items: Keypad Enable state of terminal: Disable state of terminal:
In.85 DI On Delay, In.86 DI Off Delay	If the input terminal's state is not changed during the set time, when the terminal receives an input, it is recognized as On or Off.
In.87 DI NC/NO Sel	Select terminal contact types for each input terminal. The position of the indicator light corresponds to the segment that is on as shown in the table below. With the bottom segment on, it indicates that the terminal is configured as an A terminal (Normally Open) contact. With the top segment on, it indicates that the terminal is configured as a B terminal (Normally Closed) contact. Terminals are numbered P1–P8, from right to left. Items: Keypad B contact status: A contact status:

Code and Features	Description
In.88 FX/RX NO/NC Sel	Select whether to use the terminal set to FX/RX as NO (Normal Open) only or to use as NO (Normal Open) and NC(Normal Close). If set to 1: NO only, the terminal in which the functions are set to FX/RX cannot be set as NC. If set to 0: NO/NC, terminals set as FX/RX can also be set as NC.
In.90 DI Status	Display the configuration of each contact. When a segment is configured as an A terminal using In.87, the On condition is indicated by the top segment turning on. The Off condition is indicated when the bottom segment is turned on. When contacts are configured as a B terminal, the segment lights behave conversely. Terminals are numbered P1–P8, from right to left. Items: Keypad Bit On when A contact is set: Bit Off when A contact is set:

4.19 Fire Mode Operation

This function is used to allow the inverter to ignore minor faults during emergency situations, such as fire, and provides continuous operation to fire pumps.

When turned on, Fire mode forces the inverter to ignore all minor fault trips and repeat a Reset and Restart for major fault trips, regardless of the restart trial count limit.

Fire Mode Parameter Settings

Group	Code	Name	Setting		Setting Range	Unit
Ad	80	Fire Mode selection	1	Fire Mode	0–2	-
	81	Fire Mode frequency	0–60		0–60	
	82	Fire Mode run direction	0–1		0–1	
	83	Fire Mode operation count	Not configurable		-	-
In	65–72	Px terminal setting options	51	Fire Mode	0–52	-

Ad.80. If Fire Mode Sel parameter is selected as Fire Mode and the terminal selected as 51: Fire Mode in In.65–72 Px terminal feature setup parameter is entered as On state, the inverter will operate as Fire Mode and Ad.83 Fire Mode Count will be increased by 1.

The inverter runs in Fire Mode when Ad.80 (Fire Mode Sel) is set to Fire Mode Test, and the multi-function terminal (In.65-72 Px) configured for the fire mode (51: Fire Mode) is turned on. But when the minor fault trips are ignored or there are major fault trips, automatic Reset/Restart is not attempted, and the Fire Mode Count is not increased.

Caution

Fire mode operation may result in inverter malfunction. Note that if Ad.83 Fire mode count is not "0m" the warranty is voided.

Code	Description	Details
Ad.81 Fire Mode frequency	Fire mode frequency reference	The frequency set at Ad.81 (Fire mode frequency) is used for the inverter operation in Fire mode. The Fire mode frequency takes priority over the Jog frequency, Multi-step frequencies, and the keypad input frequency.
dr.03 Acc Time / dr.04 Dec Time	Fire mode Acc/Dec times	During Fire Mode operation, the inverter accelerates for the time set in dr.03 Acc Time. If the Px terminal input set as Fire Mode input becomes Off status, the inverter decelerates for the time set in dr.04 Dec Time until the operation is ended.
Pr.10 Retry Delay	Fault trip process	Some fault trips are ignored during Fire mode operation. The fault trip history is saved, but trip outputs are disabled even when they are configured at the multi-function output terminals. **Fault trips that are ignored in Fire mode** BX, External Trip, Low Voltage Trip, Inverter Overheat, Inverter Overload, Overload, Electrical Thermal Trip, Input/Output Open Phase, Motor Overload, Fan Trip, No Motor Trips, and other minor fault trips. For the following fault trips, the inverter performs a Reset and Restart until the trip conditions are released. The retry delay time set at Pr.10 (Retry Delay) applies while the inverter performs a Reset and Restart. **Fault trips that force a Reset Restart in Fire mode** Over Voltage, Over Current1 (OC1), Ground Fault Trip The inverter stops operating when the following fault trips occur: **Fault trips that stop inverter operation in Fire mode** H/W Diag, Over Current 2 (Arm-Short)

4.20 User Sequence Settings

It is used when you want to implement a simple sequence utilizing a combination of different Function Blocks, and can be configured with up to 18 steps using 29 Function Blocks and 30 Void Parameters.

One Loop means one execution of a custom sequence of up to 18 steps. The 1Loop Time is user-selectable between 10ms and 1,000ms.

User Sequence-related groups include the US group, which is responsible for setting up User Sequences, and the UF group, which is responsible for setting up Function Blocks. The US, UF groups appear when the AP.02 code is set to 1.

* From main firmware version 3.10(dr.97), G100(C) and G100T is equipped with the User Sequence functions.

Group	Code	name	Setting	Setting Range	Unit
AP	02	Enable user sequences	0	0~1	-
US	01	User Sequence Driving Instructions	0	0~2	-
	02	User sequence run time	0	0~5	-
	11~28	Output Address Link 1 ~18	0	0~0xFFFF	-
	31~60	Setting input constant 1~30	0	-9999~9999	-
UF	01	User function 1	0	0~28	-
	02	User function input 1-A	0	0~0xFFFF	-
	03	User function input 1-B	0	0~0xFFFF	-
	04	User function input 1-C	0	0~0xFFFF	-
	05	User function output 1	0	-32767~32767	-
	06	User function 2	0	0~28	-
	07	User function input 2-A	0	0~0xFFFF	-
	08	User function input 2-B	0	0~0xFFFF	-
	09	User function input 2-C	0	0~0xFFFF	-
	10	User function output 2	0	-32767~32767	-
	11	User function 3	0	0~28	-
	12	User function input 3-A	0	0~0xFFFF	-
	13	User function input 3-B	0	0~0xFFFF	-
	14	User function input 3-C	0	0~0xFFFF	-
	15	User function output 3	0	-32767~32767	-
	16	User function 4	0	0~28	-
	17	User function input 4-A	0	0~0xFFFF	-
	18	User function input 4-B	0	0~0xFFFF	-
	19	User function input 4-C	0	0~0xFFFF	-

Group	Code	name	Setting	Setting Range	Unit
	20	User function output 4	0	-32767~32767	-
	21	User function 5	0	0~28	-
	22	User function input 5-A	0	0~0xFFFF	-
	23	User function input 5-B	0	0~0xFFFF	-
	24	User function input 5-C	0	0~0xFFFF	-
	25	User function output 5	0	-32767~32767	-
	26	User function 6	0	0~28	-
	27	User function input 6-A	0	0~0xFFFF	-
	28	User function input 6-B	0	0~0xFFFF	-
	29	User function input 6-C	0	0~0xFFFF	-
	30	User function output 6	0	-32767~32767	-
	31	User function 7	0	0~28	-
	32	User function input 7-A	0	0~0xFFFF	-
	33	User function input 7-B	0	0~0xFFFF	-
	34	User function input 7-C	0	0~0xFFFF	-
	35	User function output 7	0	-32767~32767	-
	36	User function 8	0	0~28	-
	37	User function input 8-A	0	0~0xFFFF	-
	38	User function input 8-B	0	0~0xFFFF	-
	39	User function input 8-C	0	0~0xFFFF	-
	40	User function output 8	0	-32767~32767	-
	41	User function 9	0	0~28	-
	42	User function input 9-A	0	0~0xFFFF	-
	43	User function input 9-B	0	0~0xFFFF	-
	44	User function input 9-C	0	0~0xFFFF	-
	45	User function output 9	0	-32767~32767	-
	46	User function 10	0	0~28	-
	47	User function input 10-A	0	0~0xFFFF	-
	48	User function input 10-B	0	0~0xFFFF	-
	49	User function input 10-C	0	0~0xFFFF	-
	50	User function output 10	0	-32767~32767	-
	51	User function 11	0	0~28	-
	52	User function input 11-A	0	0~0xFFFF	-
	53	User function input 11-B	0	0~0xFFFF	-
	54	User function input 11-C	0	0~0xFFFF	-
	55	User function output 11	0	-32767~32767	-
	56	User function 12	0	0~28	-
	57	User function input 12-A	0	0~0xFFFF	-

Group	Code	name	Setting	Setting Range	Unit
	58	User function input 12-B	0	0~0xFFFF	-
	59	User function input 12-C	0	0~0xFFFF	-
	60	User function output 12	0	-32767~32767	-
	61	User function 13	0	0~28	-
	62	User function input 13-A	0	0~0xFFFF	-
	63	User function input 13-B	0	0~0xFFFF	-
	64	User function input 13-C	0	0~0xFFFF	-
	65	User function output 13	0	-32767~32767	-
	66	User function 14	0	0~28	-
	67	User function input 14-A	0	0~0xFFFF	-
	68	User function input 14-B	0	0~0xFFFF	-
	69	User function input 14-C	0	0~0xFFFF	-
	70	User function output 14	0	-32767~32767	-
	71	User function 15	0	0~28	-
	72	User function input 15-A	0	0~0xFFFF	-
	73	User function input 15-B	0	0~0xFFFF	-
	74	User function input 15-C	0	0~0xFFFF	-
	75	User function output 15	0	-32767~32767	-
	76	User function 16	0	0~28	-
	77	User function input 16-A	0	0~0xFFFF	-
	78	User function input 16-B	0	0~0xFFFF	-
	79	User function input 16-C	0	0~0xFFFF	-
	80	User function output 16	0	-32767~32767	-
	81	User function 17	0	0~28	-
	82	User function input 17-A	0	0~0xFFFF	-
	83	User function input 17-B	0	0~0xFFFF	-
	84	User function input 17-C	0	0~0xFFFF	-
	85	User function output 17	0	-32767~32767	-
	86	User function 18	0	0~28	-
	87	User function input 18-A	0	0~0xFFFF	-
	88	User function input 18-B	0	0~0xFFFF	-
	89	User function input 18-C	0	0~0xFFFF	-
	90	User function output 18	0	-32767~32767	-

Details when setting up user sequences

Code and Features	Description
AP.02 User Seq En	Displays a group of user sequence-specific parameters.
US.01 User Seq Con	Set Sequence Run/Stop with the keypad. Parameters cannot be modified while driving, and can only be modified when the vehicle is stopped.
US.02 User Loop Time	Set the User Sequence Loop Time. It can be set to 0.01s/0.02s/ 0.05s/0.1s/0.5s/1s.
US.11~28 Link UserOut1~18	Sets the 18 Function Block connection parameters. If the value 0x0000 is entered, the value of Output is not used. To use the value output from Step1 at the target frequency (Cmd Frequency), enter the communication address of Cmd Frequency (0x1101) in the Link UserOut1 parameter.
US.31~60 Void Para1~30	Sets 30 Void Parameters. Use when a User Function Block requires a Constant (Const) parameter input.
UF.01~90 User defined Function I/O	Set the user-defined functions in the 18 Function Blocks. If the Function Block settings are incorrect, the output of User Output@ will be -1. The outputs of User Output@ are all Read Only values, which are used by using the Link UserOut@ in the US group.

Function Block Parameter Structure

Category	Description
User Func @*	In the Function block, select the function you want to perform.
User Input @-A	The communication bungee for the first parameter to be entered into the function.
User Input @-B	The communication bungee for the second parameter to be entered into the function.
User Input @-C	The communication bungee for the third parameter that will be entered into the function.
User Output @	The output value (Read Only) after the function block execution.

* @ is the Step number (1-18).

User Function Operation Conditions

No.	Category	Description
0	NOP	No Operation
1	ADD	Addition operation, (A + B) + C Recognizes as 0 if parameter in C is 0x0000
2	SUB	Subtraction operation, (A - B) – C Recognize as 0 if the parameter of C is 0x0000
3	ADDSUB	Add and Subtract Mixed Operation, (A + B) – C Recognize as 0 if the parameter of C is 0x0000
4	MIN	Output the smallest of the input values, MIN(A, B, C) Operate on A, B alone if parameter in C is 0x0000
5	MAX	Output the largest of the input values, MAX(A, B, C) Operate on A, B alone if parameter in C is 0x0000
6	ABS	Outputs the absolute value of the A parameter, | A | Parameters in B and C are not used
7	NEGATE	Outputs the reciprocal of the A parameter, -(A) Parameters in B and C are not used
8	REMAINDER	The remainder of the operation of A and B, A % B Parameters in C are not used
9	MPYDIV	Multiplication, division mixed operation, (A x B) / C Outputs only the multiplication operation (A x B) when the parameter in C is 0x0000
10	COMPARE-GT (Great Then)	Comparison operation, if(A > B) then C else 0 Outputs the parameter of C if the condition is satisfied, otherwise 0 (False) If the parameter of C is 0x0000, output 1 (True) if the condition is satisfied
11	COMPARE-GTEQ (Great Then or Equal To)	Comparison operation, if(A >= B) then C else 0 Outputs the parameter of C if the condition is met, otherwise 0 (False) If the parameter of C is 0x0000, output 1 (True) if the condition is satisfied
12	COMPARE-EQUAL	Comparison operation, if(A == B) then C else 0 Outputs the parameter of C if the condition is satisfied, otherwise 0 (False) If the parameter of C is 0x0000, output 1 (True) if the condition is satisfied
13	COMPARE-NEQUAL	Comparison operation, if(A != B) then C else 0 Outputs the parameter of C if the condition is satisfied, otherwise 0 (False)

No.	Category	Description
		If the parameter of C is 0x0000, output 1 (True) if the condition is satisfied
14	TIMER	Increment operation by 1 for every loop of user sequence A: Max Loop, B: Timer Run / Stop, C: Select the output method If the input of B is 1, the timer stops (output is 0), otherwise 0(it runs) If the input of C is 1, output the current Time. If the input of C is 0, output 1 when the Timer value exceeds the value of A(Max) If the parameter of C is 0x0000 C is recognized as 0 Timer's Overflow is reset back to zero
15	LIMIT	Setting the Limit of the A Parameter If the input of A is between B and C, the input of A is output as it is If A's input is greater than B, output B If A’s input is less than C, output C B's parameter must be greater than or equal to C's parameter
16	AND	AND operation outputs, (A & B) & C Operate on A, B alone if parameter in C is 0x0000
17	OR	OR operation outputs, (A | B) | C Operate on A, B alone if C's parameter is 0x0000
18	XOR	Outputs an XOR operation, (A ^ B) ^ C Operate on A, B alone if the parameter in C is 0x0000
19	ANDOR	Output the ANDOR operation, (A & B) | C
20	SWITCH	Select one of two inputs to output, if(A) then B else C Output the parameter of B if the input of A is 1 and C if it is 0
21	BITTEST	Test the B bit of parameter A, BITTEST(A, B) Output 1 if the Bth bit in A's input is 1 and 0 if it is 0. The input of B can be a value between 0 and 16, with 16 recognized as 16 or greater. If B's input is 0, the output is always 0 The parameter in C is not used
22	BITSET	Set the Bth bit of parameter A, BITSET(A, B) Set the Bth bit of A's input and output the changed value. The input of B can be a value between 0 and 16, with 16 recognized as 16 or greater. If B's input is 0, the output will always be A The parameter in C is not used

No.	Category	Description
23	BITCLEAR	Clear the Bth bit of parameter A, BITCLEAR(A, B) Clear the Bth bit of A's input and output the changed value. B's input can be a value between 0 and 16, with 16 recognized as 16 if it is greater than 16. If B's input is 0, the output will always be A C's parameter is not used
24	LOWPASSFILTER	A's Input to B Filter Gain Corrected Water Output, BxUS.02 (US Loop Time) Use the above formula to set the time when A's output reaches 63.3%. B's parameter is the input of 0 or higher C is whether the filter works or not, if it is 0, it works
25	PI_CONTROL	Takes in P and I gains as A and B parameters, respectively, and outputs them as selected values in C. If C's input is 0, Const PI, if 1, then PI_PROCESS-B >= PI_PROCESS-OUT >= 0, if 2, PI_PROCESS-B >= PI_PROCESS-OUT >= -(PI_PROCESS-B), then the value of (PI_PROCESS-B) is output through PI_PROCESS Calculated as PGain = A / 100, IGain = 1/(Bx Loop Time) Output -1 if there is an error in the PI setting
26	PI_PROCESS	A is the input Error, B is the output Limit, and C is the Const PI output value. C can range from 0 to 32,767
27	UPCOUNT	Up-Count a Pulse and Output, UPCOUNT(A, B, C) Takes a Trigger input from A and outputs a count conditional on C. Does not work if B's input is 1, outputs 0, works if 0 If C's parameter is 0, Up-Count when A's input changes from 0->1 If C's parameter is 1, Up-Count when A's input changes from 1->0 If C's parameter is 2, Up-Count whenever A's input changes value The output range is 0 to 32767
28	DOWNCOUNT	Down-Count a Pulse and Output, DOWNCOUNT(A, B, C) Takes a Trigger input from A and outputs a down-count from the value in C. Does not work if B's input is 1, outputs C's initial value, works if 0 Down-Count when A's input changes from 0→1

Note

The PI_CONTROL Block must be followed by the PI_PROCESS Block for normal PI control operation. If there is another block between the two blocks, or if the order of the two blocks is reversed, PI control operation will not occur.

5 Learning Advanced Features

This chapter describes the advanced features of the G100 inverter. Check the reference page in the table to see the detailed description for each of the application features.

Advanced Tasks	Use Example	Ref.
Auxiliary frequency operation	Use the main and auxiliary frequencies in the predefined formulas to create various operating conditions. Auxiliary frequency operation is ideal for Draw Operation* as this feature enables fine-tuning of operation speeds.	p.134
Jog operation	Jog operation is a kind of a manual operation. The inverter operates to a set of parameter settings predefined for Jog operation, while the Jog command button is pressed.	p.138
Up-down operation	Uses the upper and lower limit value switch output signals (i.e. signals from a flow meter) as Acc/Dec commands to motors.	p.140
3-wire operation	3-wire operation is used to latch an input signal. This configuration is used to operate the inverter by a push button.	p.143
Safe Operation mode	This safety feature allows the inverter's operation only after a signal is input to the multi-function terminal designated for the safety operation mode. This feature is useful when extra care is needed in operating the inverter using the multi-purpose terminals.	p.145
Dwell operation	Use this feature for the lift-type loads such as elevators, when the torque needs to be maintained while the brakes are applied or released.	p.146
Slip compensation	This feature ensures that the motor rotates at a constant speed, by compensating for the motor slip as a load increases.	p.148
PID Control	PID control provides automatic control of the inverter's output frequency for the purpose of constant automated control of flow, pressure, and temperature.	p.149
Auto tuning	Used to automatically measure the motor control parameters to optimize the inverter's control mode performance.	p.156
Sensorless vector control	An efficient mode to control magnetic flux and torque without special sensors. Efficiency is achieved through the high torque characteristics at low current when compared with the V/F control mode.	p.159
Energy buffering	Used to maintain the DC link voltage for as long as possible by controlling the inverter output frequency during power interruptions, thus to delay a low voltage fault trip.	p.166

Advanced Tasks	Use Example	Ref.
Energy saving operation	Used to save energy by reducing the voltage supplied to motors during low-load and no-load conditions.	p.170
Speed search operation	Used to prevent fault trips when the inverter voltage is output while the motor is idling or free-running.	p.171
Auto restart operation	Auto restart configuration is used to automatically restart the inverter when a trip condition is released, after the inverter stops operating due to activation of protective devices (fault trips).	p.175
2nd Motor Operation	Used to switch equipment operation by connecting two motors to one inverter. Configure and operate the second motor using the terminal input defined for the second motor operation.	p.178
Commercial power source transition	Used to switch the power source to the motor from the inverter output to a commercial power source, or vice versa.	p.179
Cooling fan control	Used to control the cooling fan of the inverter.	p.180
Timer settings	Set the timer value and control the On/Off state of the multi-function output and relay.	p.184
Brake control	Used to control the On/Off operation of the load's electronic braking system.	p.185
Multi-function Relay On/Off control	Set standard values and turn On/Off the output relays or multi-function output terminals according to the analog input value.	p.187
Press regeneration prevention	Used during a press operation to avoid motor regeneration, by increasing the motor operation speed.	p.188

* Draw operation is an open loop tension control. This feature allows a constant tension to be applied to the material that is drawn by a motor-driven device, by fine-tuning the motor speed using operation frequencies that are proportional to a ratio of the main frequency reference.

5.1 Operating with Auxiliary References

Frequency references can be configured with various calculated conditions that use the main and auxiliary frequency references simultaneously. The main frequency reference is used as the operating frequency, while auxiliary references are used to modify and fine-tune the main reference.

Group	Code	Name	Setting		Setting Range	Unit
Operation	Frq	Frequency reference source	0	Keypad-1	0–9	-
bA	01	Auxiliary reference source	1	V1	0–4	-
	02	Auxiliary command calculation type	0	M+(G*A)	0–7	-
	03	Auxiliary frequency reference gain	0.0		-200.0–200.0	%
In	65– 72	Px terminal setting options	40	dis Aux Ref	0–52	-

The table above lists the available calculated conditions for the main and auxiliary frequency references. Refer to the table to see how the calculations apply to an example where the Frq code has been set to 0 (Keypad-1), and the inverter is operating at a main reference frequency of 30.00 Hz. Signals at -10 – +10 V are received at terminal V1, with the reference gain set at 5%. In this example, the resulting frequency reference is fine-tuned within the range of 27.00–33.00 Hz [Codes In.01–16 must be set to the default values, and In.06 (V1 Polarity), set to 1 (Bipolar)].

Auxiliary Reference Setting Details

<table>
<tr><th>Code and Features</th><th>Description</th></tr>
<tr><td>bA.01
Aux Ref Src</td><td>Set the input type to be used for the auxiliary frequency reference.
<table>
<tr><th colspan="2">Configuration</th><th>Function</th></tr>
<tr><td>0</td><td>None</td><td>Auxiliary frequency reference is disabled.</td></tr>
<tr><td>1</td><td>V1</td><td>Sets the V1 (voltage) terminal at the control terminal block as the source of auxiliary frequency reference.</td></tr>
<tr><td>2</td><td>V2</td><td>Sets the V2 (voltage) terminal at the control terminal block as the source of auxiliary frequency reference.</td></tr>
<tr><td>3</td><td>V0</td><td>Select the volume dial of keypad as auxiliary command.</td></tr>
<tr><td>4</td><td>I2</td><td>Sets the I2 (current) terminal at the control terminal block as the source of auxiliary frequency reference.</td></tr>
</table></td></tr>
</table>

<table>
<tr><th>Code and Features</th><th>Description</th></tr>
<tr><td>bA.02
Aux Calc Type</td><td>Set the auxiliary reference gain with bA.03 (Aux Ref Gain) to configure the auxiliary reference and set the percentage to be reflected when calculating the main reference. Note that items 4–7 below may result in either plus (+) or minus (-) references (forward or reverse operation) even when unipolar analog inputs are used.
<table>
<tr><th colspan="2">Configuration</th><th>Calculating final command frequency</th></tr>
<tr><td>0</td><td>M+(G*A)</td><td>Main reference+(bA.03xbA.01xIn.01)</td></tr>
<tr><td>1</td><td>M*(G*A)</td><td>Main referencex(bA.03xbA.01)</td></tr>
<tr><td>2</td><td>M/(G*A)</td><td>Main reference/(bA.03xbA.01)</td></tr>
<tr><td>3</td><td>M+{M*(G*A)}</td><td>Main reference+{Main referencex(bA.03xbA.01)}</td></tr>
<tr><td>4</td><td>M+G*2*(A-50)</td><td>Main reference+bA.03x2x(bA.01–50)xIn.01</td></tr>
<tr><td>5</td><td>M*{G*2*(A-50)}</td><td>Main referencex{bA.03x2x(bA.01–50)}</td></tr>
<tr><td>6</td><td>M/{G*2*(A-50)}</td><td>Main reference/{bA.03x2x(bA.01–50)}</td></tr>
<tr><td>7</td><td>M+M*G*2*(A-50)</td><td>Main reference+Main referencexbA.03x2x(bA.01–50)</td></tr>
</table>
M: Main frequency reference (Hz or rpm)
G: Auxiliary reference gain (%)
A: Auxiliary frequency reference (Hz or rpm) or gain (%)</td></tr>
<tr><td>bA.03
Aux Ref Gain</td><td>Adjust the size of the input (bA.01 Aux Ref Src) configured for auxiliary frequency.</td></tr>
<tr><td>In.65–72
Px Define</td><td>Set one of the multi-function input terminals to 40 (dis Aux Ref) and turn it on to disable the auxiliary frequency reference. The inverter will operate using the main frequency reference only.</td></tr>
</table>

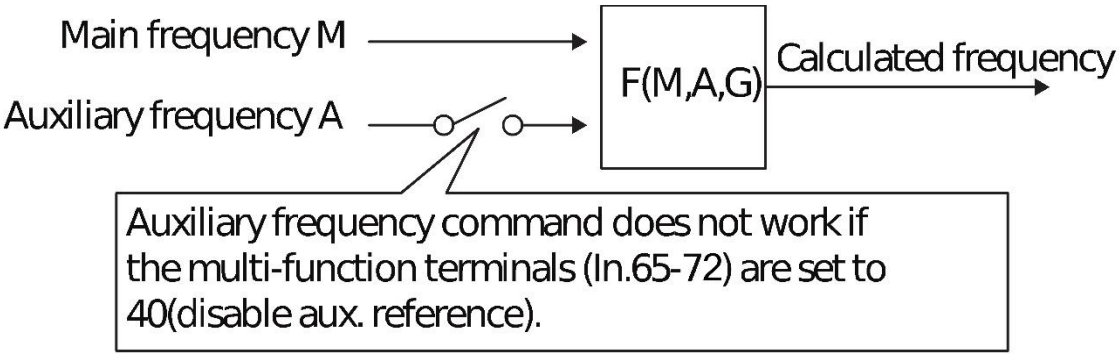

Auxiliary Reference Operation E.g. #1

Keypad Frequency Setting is Main Frequency and V1 Analog Voltage is Auxiliary Frequency

- Main frequency: Keypad (operation frequency 30 Hz)
- Maximum frequency setting (dr.20): 400 Hz
- Auxiliary frequency setting (bA.01): V1[Display by percentage(%) or auxiliary frequency (Hz) depending on the operation setting condition]
- Auxiliary reference gain setting (bA.03): 50%
- In.01-32: Factory default output

Example: an input voltage of 6V is supplied to V1, and the frequency corresponding to 10 V is 60 Hz. The table below shows the auxiliary frequency A as 36 Hz [=60 Hz X (6 V/10 V)] or 60% [= 100% X (6 V/10 V)].

Setting*		Calculating final command frequency
0	M[Hz]+(G[%]*A[Hz])	30 Hz(M)+(50%(G)x36 Hz(A))=48 Hz
1	M[Hz]*(G[%]*A[%])	30 Hz(M)x(50%(G)x60%(A))=9 Hz
2	M[Hz]/(G[%]*A[%])	30 Hz(M)/(50%(G)x60%(A))=100 Hz
3	M[Hz]+{M[Hz]*(G[%]*A[%])}	30 Hz(M)+{30[Hz]x(50%(G)x60%(A))}=39 Hz
4	M[Hz]+G[%]*2*(A[%]-50[%])*A[Hz]	30 Hz(M)+50%(G)x2x(60%(A)–50%)x60 Hz=36 Hz
5	M[HZ]*{G[%]*2*(A[%]-50[%])}	30 Hz(M)x{50%(G)x2x(60%(A)–50%)}=3 Hz
6	M[HZ]/{G[%]*2*(A[%]-50[%])}	30 Hz(M)/{50%(G)x2x(60%–50%)}=300 Hz
7	M[HZ]+M[HZ]*G[%]*2*(A[%]-50[%])	30 Hz(M)+30 Hz(M)x50%(G)x2x(60%(A)–50%)=33 Hz

*M: Main frequency reference/ G: Auxiliary reference gain (%)/ A: Auxiliary frequency reference (Hz or rpm) or gain (%)

Auxiliary Reference Operation E.g. #2

Keypad Frequency Setting is Main Frequency and I2 Analog Current is Auxiliary Frequency

- Main frequency: Keypad (operation frequency 30 Hz)
- Maximum frequency setting (dr.20): 400 Hz
- Auxiliary frequency setting (bA.01): I2[Display by percentage(%) or auxiliary frequency (Hz) depending on the operation setting condition]
- Auxiliary reference gain setting (bA.03): 50%
- In.01-32: Factory default output

Example: an input current of 10.4 mA is applied to I2, with the frequency corresponding to 20 mA of 60 Hz. The table below shows auxiliary frequency A as 24 Hz (=60[Hz] X {(10.4[mA]-4[mA])/ (20[mA] - 4[mA])} or 40% (=100[%] X {(10.4[mA] - 4[mA])/ (20[mA] - 4[mA])}.

Setting*		Calculating final command frequency
0	M[Hz]+(G[%]*A[Hz])	30 Hz(M)+(50%(G)x24 Hz(A))=42 Hz
1	M[Hz]*(G[%]*A[%])	30 Hz(M)x(50%(G)x40%(A))=6 Hz
2	M[Hz]/(G[%]*A[%])	30 Hz(M)/(50%(G)x40%(A))=150 Hz
3	M[Hz]+{M[Hz]*(G[%]*A[%])}	30 Hz(M)+{30[Hz]x(50%(G)x40%(A))}=36 Hz
4	M[Hz]+G[%]*2*(A[%]-50[%])*A[Hz]	30 Hz(M)+50%(G)x2x(40%(A)–50%)x60 Hz= 24 Hz
5	M[HZ]*{G[%]*2*(A[%]-50[%])}	30 Hz(M)x{50%(G)x2x(40%(A)–50%)} = -3 Hz(Reverse)
6	M[HZ]/{G[%]*2*(A[%]-50[%])}	30 Hz(M)/{50%(G)x2x(60%–40%)} = -300 Hz(Reverse)
7	M[HZ]+M[HZ]*G[%]*2*(A[%]-50[%])	30 Hz(M)+30 Hz(M)x50%(G)x2x (40%(A)–50%)= 27 Hz

* M: Main frequency reference/ G: Auxiliary reference gain (%)/ A: Auxiliary frequency reference (Hz or rpm) or gain (%)

Auxiliary Reference Operation E.g. #3

V1 is Main Frequency and I2 is Auxiliary Frequency

- Main frequency: V1 (frequency command setting to 5 V and is set to 30 Hz)
- Maximum frequency setting (dr.20): 400 Hz
- Auxiliary frequency (bA.01): I2[Display by percentage (%) or auxiliary frequency (Hz) depending on the operation setting condition]
- Auxiliary reference gain (bA.03): 50%
- In.01-32: Factory default output

Example: an input current of 10.4 mA is applied to I2, with the frequency corresponding to 20 mA of 60 Hz. The table below shows auxiliary frequency A as 24 Hz(=60[Hz]x{(10.4[mA]-4[mA])/(20[mA]-4[mA])} or 40%(=100[%] x {(10.4[mA] - 4[mA]) /(20 [mA] - 4[mA])}.

Setting*		Calculating final command frequency
0	M[Hz]+(G[%]*A[Hz])	30 Hz(M)+(50%(G)x24 Hz(A))=42 Hz
1	M[Hz]*(G[%]*A[%])	30 Hz(M)x(50%(G)x40%(A))=6 Hz
2	M[Hz]/(G[%]*A[%])	30 Hz(M)/(50%(G)x40%(A))=150 Hz
3	M[Hz]+{M[Hz]*(G[%]*A[%])}	30 Hz(M)+{30[Hz]x(50%(G)x40%(A))}=36 Hz
4	M[Hz]+G[%]*2*(A[%]-50[%])*A[Hz]	30 Hz(M)+50%(G)x2x(40%(A)–50%)x60 Hz=24 Hz
5	M[HZ]*{G[%]*2*(A[%]-50[%])}	30 Hz(M)x{50%(G)x2x(40%(A)–50%)}=-3 Hz(Reverse)
6	M[HZ]/{G[%]*2*(A[%]-50[%])}	30 Hz(M)/{50%(G)x2x(60%–40%)}= -300 Hz(Reverse)
7	M[HZ]+M[HZ]*G[%]*2*(A[%]-50[%])	30 Hz(M)+30 Hz(M)x50%(G)x2x(40%(A)–50%)=27 Hz

* M: Main frequency reference/ G: Auxiliary reference gain (%)/ A: Auxiliary frequency reference (Hz or rpm) or gain (%)

Note

When the maximum frequency value is high, output frequency deviation may result due to analog input variation and deviations in the calculations.

5.2 Jog Operation

The jog operation allows for a temporary control of the inverter. You can enter a jog operation command using the multi-function terminals.

The jog operation is the second highest priority operation, after the dwell operation. If a jog operation is requested while operating the multi-step, up-down, or 3-wire operation modes, the jog operation overrides all other operation modes.

5.2.1 Jog Operation 1-Forward

The jog operation is available in either forward or reverse direction, using the keypad or multi-function terminal inputs. The table below lists parameter setting for a forward jog operation using the multi-function terminal inputs.

Group	Code	Name	Setting		Setting Range	Unit
dr	11	Jog frequency	10.00		0.50–Max Frequency	Hz
	12	Jog run acceleration time	20.00		0.00–600.00	sec
	13	Jog run deceleration time	30.00		0.00–600.00	sec
In	65–72	Px terminal setting options	6	JOG	0–52	-

Forward Jog Description Details

Code and Features	Description
In.65–72 Px Define	Select the jog frequency from P1–P8 and then select 6. Jog from In.65–72.

Code and Features	Description
	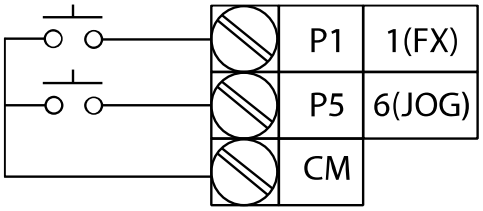 [Terminal settings for jog operation]
dr.11 JOG Frequency	Set the operation frequency.
dr.12 JOG Acc Time	Set the acceleration time.
dr.13 JOG Dec Time	Set the deceleration time.

If a signal is entered at the jog terminal while an FX operation command is on, the operation frequency changes to the jog frequency and the jog operation begins.

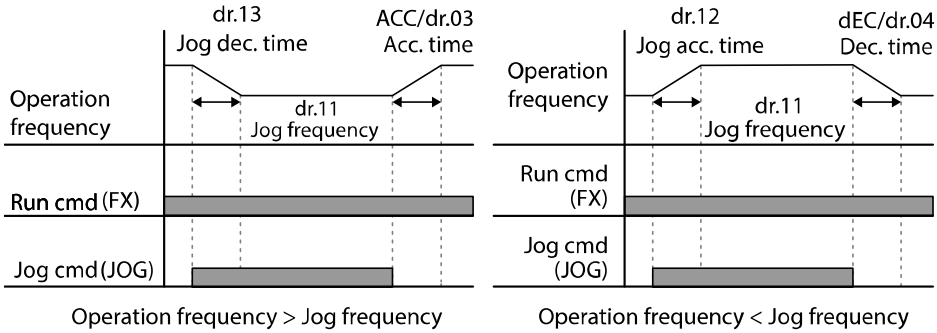

5.2.2 Jog Operation 2-Fwd/Rev Jog by Multi-Function Terminal

For jog operation 1, an operation command must be entered to start operation, but while using jog operation 2, a terminal that is set for a forward or reverse jog also starts an operation. The priorities for frequency, Acc/Dec time and terminal block input during operation in relation to other operating modes (Dwell, 3-wire, up/down, etc.) are identical to jog operation 1. If a different operation command is entered during a jog operation, it is ignored and the operation maintains the jog frequency.

Group	Code	Name	Setting	Setting Range	Unit
dr	11	Jog Frequency	10.00	0.50–Maximum frequency	Hz
	12	Jog run acceleration time	20.00	0.00–600.00	sec
	13	Jog run deceleration time	30.00	0.00–600.00	sec

Group	Code	Name	Setting		Setting Range	Unit
In	65–72	Px terminal setting options	46	FWD JOG	0–52	-
			47	REV JOG		

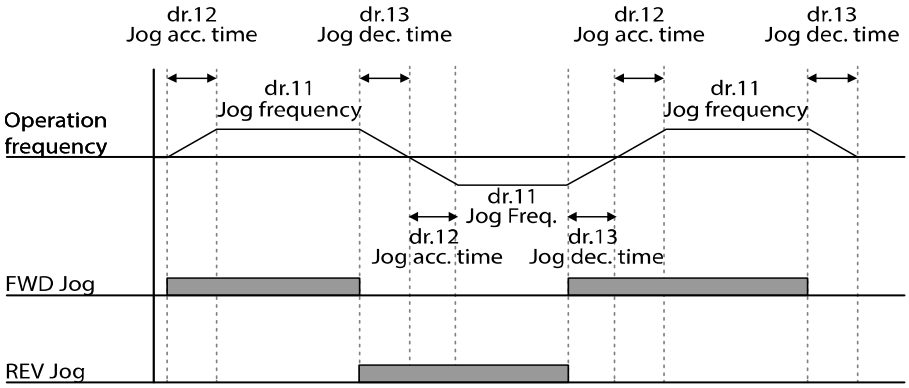

5.3 Up-down Operation

The Acc/Dec time can be controlled through input at the multi-function terminal block. Similar to a flowmeter, the up-down operation can be applied easily to a system that uses the upper-lower limit switch signals for Acc/Dec commands.

Group	Code	Name	Setting		Setting Range	Unit
Ad	65	Up-down operation frequency save	1	Yes	0–1	-
Ad	85	Up-down operation mode	0	U/D Normal		
			1	U/D Step		
			2	U/D Step+Norm	0~2	-
Ad	86	Up-down step frequency	0.00		0.00~ maximum frequency	Hz
In	65–72	Px terminal setting options	17	Up	0–52	-
			18	Down		
			20	U/D Clear		
			27	U/D Enable		

If there is a multi-function terminal set to U/D Enable among the multi-function terminal blocks, the command frequency source can be change depending on the U/D Enable terminal status. For example, when the U/D Enable signal is off, even if up-down signal is entered for the up-down operation while operating according to the analog voltage input V1, the inverter will operate according to the analog voltage input V1. If the up-down switchover (U/D Enable) signal is entered, the operation will follow the up-down operation terminal input and the analog voltage input V1 will not be used

for the inverter operation until the up-down switchover (U/D Enable) signal is disabled. If none of the multi-function terminal blocks have a multi-function terminal set to U/D Enable, the frequency will change only according to the up-down signal. In this case, the parameter will not be changed by keypad/analog input.

Up-down Operation Setting Details

Code and Features	Description
In.65–72 Px Define	Select three terminals for up-down operation and set them to 17 (Up), 18 (Down) and 27 (U/D Enable), respectively. If the up-down switchover (U/D Enable) command is not entered, acceleration/deceleration will follow the operation command set in drv. If the up-down switchover (U/D Enable) command is entered during acceleration/deceleration, acceleration/deceleration will stop to wait for Up and Down commands. When the operation command and up-down activation command is entered, the operation will be accelerated if the Up terminal signal turns On, and the acceleration will stop to operate as a constant speed if the signal turns Off. When signal is off, deceleration stops and it operates in constant speed. Deceleration stops and constant speed operation begins when both Up and Down signals are entered at the same time. 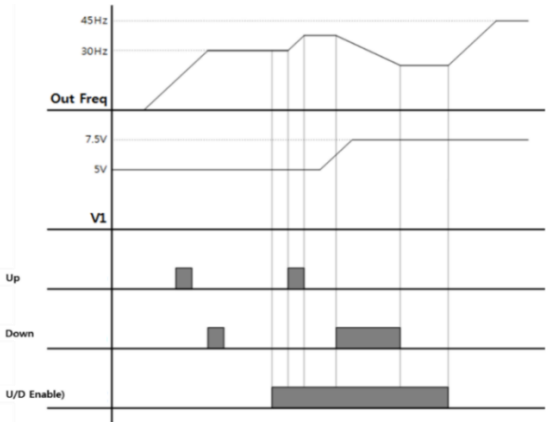
Ad.65 U/D Save Mode	During a constant speed operation, the operating frequency is saved automatically in the following conditions: the operation command (FX or RX) is off, a fault trip occurs, or the power is off. When the operation command is turned on again, or when the inverter regains the power source or resumes to a normal operation from a fault trip, it resumes operation at the saved frequency. To delete the saved frequency, use the multi-function terminal block. Set one of the multi-function terminals to 20 (U/D Clear) and apply signals to it during constant speed operation. The saved frequency and the up-down operation configuration will be deleted.

<table>
<tr><th>Code and Features</th><th>Description</th></tr>
<tr><td></td><td> 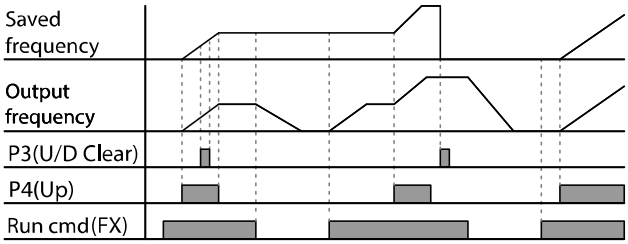
</td></tr>
<tr><td>Ad.85
U/D Mode Sel</td><td>Select Up-Down Operation mode.
<table>
<tr><th colspan="2">setting</th><th>Function</th></tr>
<tr><td>0</td><td>U/D Normal</td><td>Press Up to increase the maximum frequency with the set acc time.
Press Down to decrease to the set dec time regardless of the stop method.</td></tr>
<tr><td>1</td><td>U/D Step</td><td>Acc/dec by the Step frequency up/down set in Ad.86 on the rising edge of the set multi-function input.</td></tr>
<tr><td>2</td><td>U/D Step+Norm</td><td>Acc/dec by the Step frequency up/down set in Ad.86 on the rising edge of the set multi-function input, If enabled for more than 3 seconds, it behaves as set to U/D Normal mode.</td></tr>
</table>
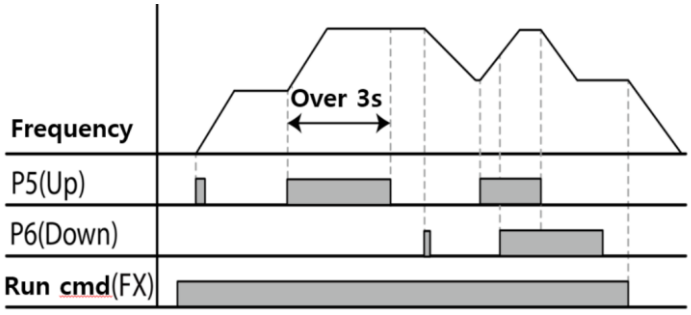

<1: U/D Step>
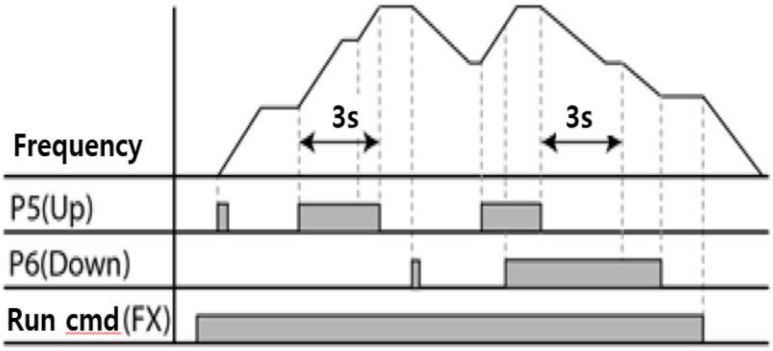

<2: U/D Step+Norm></td></tr>
</table>

Code and Features	Description
Ad.86 U/D Step Freq	According to Up-Down input, Sets the frequency value to be increased or decreased.

5.4 3-Wire Operation

The 3-wire operation latches the signal input (the signal stays on after the button is released), and is used when operating the inverter with a push button.

Group	Code	Name	Setting		Setting Range	Unit
Operation	drv	Command Source	1	FX/RX - 1	-	-
In	65–72	Px terminal setting options	14	3-Wire	0–52	-

To enable the 3-wire operation, the following circuit sequence is necessary. The minimum input time (t) for 3-wire operation is 1ms, and the operation stops when both forward and reverse operation commands are entered at the same time.

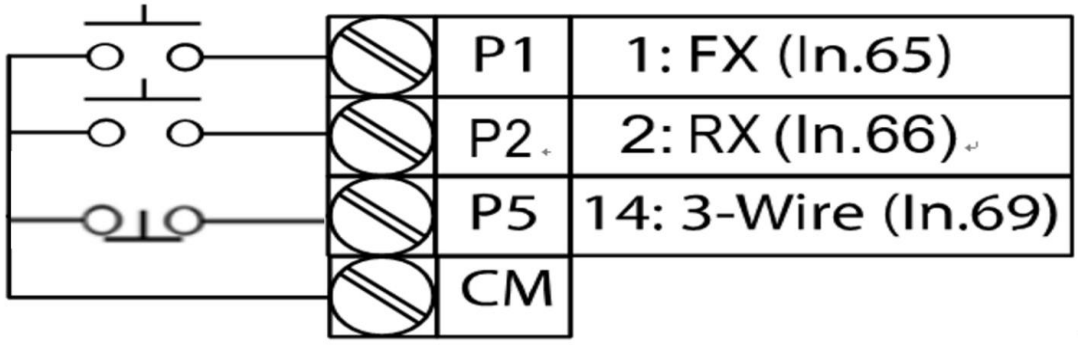

[Terminal connections for 3-wire operation]

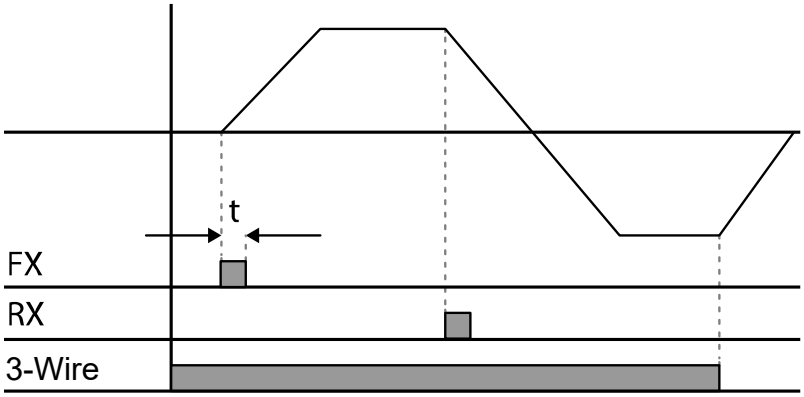

[3-wire operation]

5.5 Safe Operation mode

When the multi-function terminals are configured to operate in safe mode, operation commands can be entered in the Safe operation mode only. Safe operation mode is used to safely and carefully control the inverter through the multi-function terminals.

Group	Code	Name	Setting		Setting Range	Unit
Ad	70	Safe operation selection	1	DI Dependent	-	
	71	Safe operation stop options	0	Free-Run	0–2	-
	72	Safe operation deceleration time	5.0		0.0–600.0	sec
In	65–72	Px terminal setting options	13	RUN Enable	0–52	-

Safe Operation Mode Setting Details

Code and Features	Description
In.65–72 Px Define	From the multi-function terminals, select a terminal to operate in safe operation mode and set it to 13 (RUN Enable).
Ad.70 Run En Mode	

Configuration		Function
0	Always Enable	Enables safe operation mode.
1	DI Dependent	Recognizes the operation command from a multi-function input terminal.

Ad.71 Run Dis Stop

Set the operation of the inverter when the multi-function input terminal in safe operation mode is off.

Configuration		Function
0	Free-Run	Blocks the inverter output when the multi-function terminal is off.
1	Q-Stop	The deceleration time (Q-Stop Time) used in safe operation mode. Once stopped, the operation command must be entered again to restart the operation even if the multi-function terminal is turned On.
2	Q-Stop Resume	The inverter decelerates to the deceleration time (Q-Stop Time) in safe operation mode and stops. Once stopped, a normal operation will be continued if the multi-function terminal is entered again when the operation command is turned On.

Ad.72 Q-Stop Time	Sets the deceleration time when Ad.71 (Run Dis Stop) is set to 1 (Q-Stop) or 2 (Q-Stop Resume).

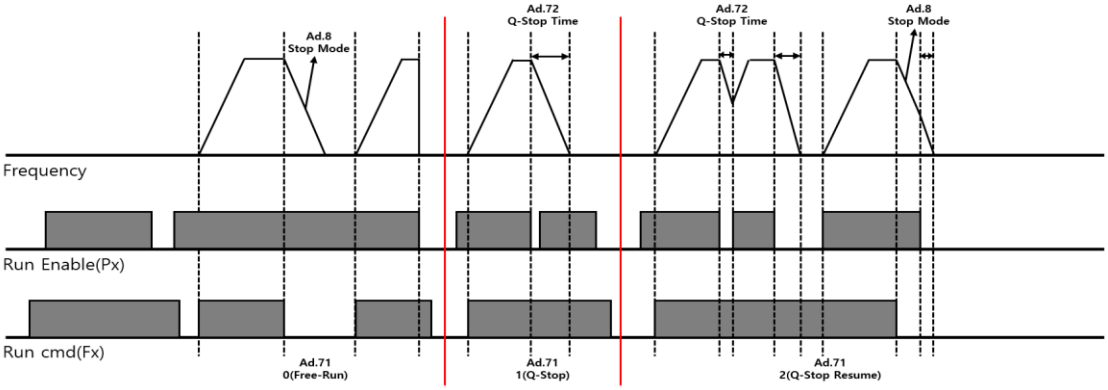

5.6 Dwell Operation

The dwell operation is used to maintain torque during the application and release of the brakes on lift-type loads. Inverter dwell operation is based on the Acc/Dec dwell frequency and the dwell time set by the user. The following points also affect dwell operation:

- **Acceleration Dwell Operation:** When an operation command runs, acceleration continues until the acceleration dwell frequency and constant speed is reached within the acceleration dwell operation time (Acc Dwell Time). After the Acc Dwell Time has passed, acceleration is carried out based on the acceleration time and the operation speed that was originally set.
- **Deceleration Dwell Operation**: When a stop command is run, deceleration continues until the deceleration dwell frequency and constant speed is reached within the deceleration dwell operation time (Dec Dwell Freq). After the set time has passed, deceleration is carried out based on the deceleration time that was originally set, then the operation stops.

When dr.09 (Control Mode) is set to 0 (V/F), the inverter can be used for operations with dwell frequency before opening the mechanical brake of lift-type loads, such as an elevator.

Group	Code	Name	Setting	Setting Range	Unit
Ad	20	Dwell frequency on acceleration	5.00	Start frequency–Maximum frequency	Hz
	21	Operation time during acceleration	0.0	0.0–10.0	sec
	22	Dwell frequency during deceleration	5.00	Start frequency–Maximum frequency	Hz
	23	Operation time during deceleration	0.0	0.0–60.0	sec

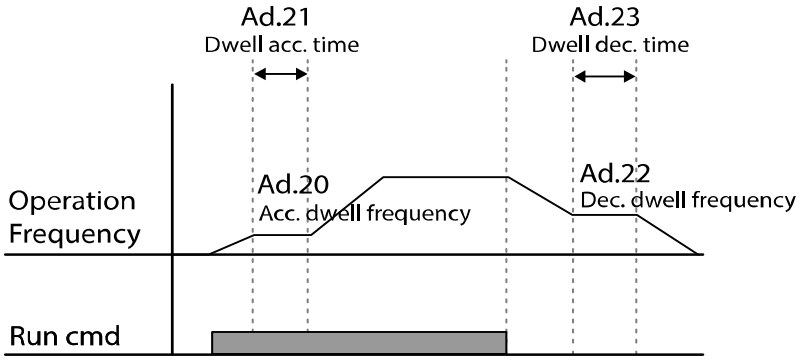

Note

Dwell operation does not work when:

- Dwell operation time is set to 0 sec or dwell frequency is set to 0 Hz.
- Re-acceleration is attempted from stop or during deceleration, as only the first acceleration dwell operation command is valid.

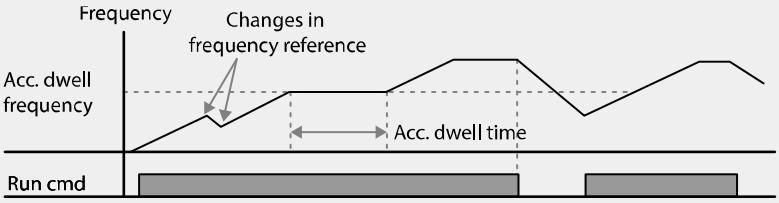

[Acceleration dwell operation]

- Although deceleration dwell operation is carried out whenever stop commands are entered and the deceleration dwell frequency is passed through, it does not work during a deceleration by simple frequency change (which is not a deceleration due to a stop operation), or during external brake control applications.

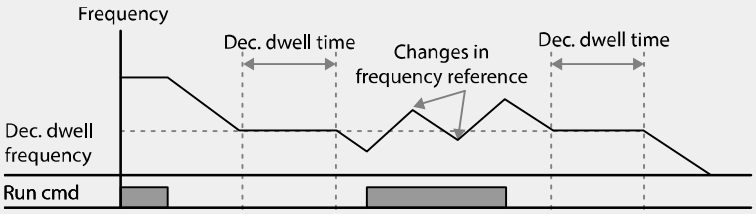

[Deceleration dwell operation]

Caution

When a dwell operation is carried out for a lift - type load before its mechanical brake is released, motors can be damaged or their lifecycle reduced due to overflow current in the motor.

5.7 Slip Compensation Operation

Slip refers to the variation between the setting frequency (synchronous speed) and motor rotation speed. As the load increases there can be variations between the setting frequency and motor rotation speed. Slip compensation is used for loads that require compensation of these speed variations.

Group	Code	Name	Setting		Setting Range	Unit
dr	09	Control mode	2	Slip Compen	-	-
	14	Motor capacity	2	0.75 kW (0.75 kW based)	0–15	-
bA	11	Number of motor poles	4		2–48	-
	12	Rated slip speed	70 (0.75 kW based)		0–3000	Rpm
	13	Rated motor current	3.3 (0.75 kW based)		1.0–1000.0	A
	14	Motor noload current	1.7 (0.75 kW based)		0.5–1000.0	A
	16	Motor efficiency	83 (0.75 kW based)		64–100	%
	17	Load inertia rate	0 (0.75 kW based)		0–8	-

Slip Compensation Operation Setting Details

Code and Features	Description
dr.09 Control Mode	Set dr.09 to 2 (Slip Compen) to carry out the slip compensation operation.
dr.14 Motor Capacity	Set the capacity of the motor connected to the inverter.
bA.11 Pole Number	Enter the number of poles from the motor rating plate.
bA.12 Rated Slip	Enter the number of rated rotations from the motor rating plate. $f_s = f_r - \frac{Rpm \times P}{120}$ $f_s = Rated\ slip\ frequency,$ $f_r = Rated\ frequency,$ $Rpm = Number\ of\ the\ rated\ motor\ rotations,$ $P = Number\ of\ motor\ poles$
bA.13 Rated Curr	Enter the rated current from the motor rating plate.
bA.14 Noload Curr	Enter the measured current when the load on the motor axis is removed and when the motor is operated at the rated frequency. If no-load current is difficult to measure, enter a current equivalent to 30–50% of the rated motor current.

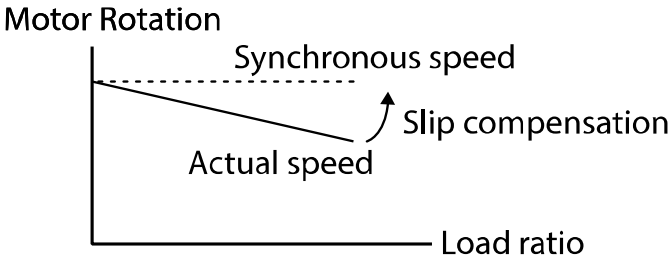

5.8 PID Control

PID control is one of the most common auto-control methods. It uses a combination of proportional, integral, and differential (PID) control that provides more effective control for automated systems.

The functions of PID control that can be applied to the inverter operation are as follows:

Code	Function
Speed control	Controls speed by using feedback about the existing speed level of the equipment or machinery to be controlled. Control maintains consistent speed or operates at the target speed.
Pressure Control	Controls pressure by using feedback about the existing pressure level of the equipment or machinery to be controlled. Control maintains consistent pressure or operates at the target pressure.
Flow Control	Controls flow by using feedback about the amount of existing flow in the equipment or machinery to be controlled. Control maintains consistent flow or operates at a target flow.
Temperature Control	Controls temperature by using feedback about the existing temperature level of the equipment or machinery to be controlled. Control maintains a consistent temperature or operates at a target temperature.

5.8.1 Basic PID Operation

PID operates by controlling the output frequency of the inverter, through automated system process control to maintain speed, pressure, flow, temperature and tension.

Group	Code	Name	Setting		Setting Range	Unit
AP	01	Application function selection	2	Proc PID	0–2	-
	16	PID output monitor	-		-	-
	17	PID reference monitor	-		-	-
	18	PID feedback monitor	-		-	-
	19	PID reference setting	50.00		-100.00–100.00	%
	20	PID reference source	0	Keypad	0–8	-
	21	PID feedback source	0	V1	0–7	-
	22	PID controller proportional gain	50.0		0.0–1000.0	%
	23	PID controller integral time	10.0		0.0–200.0	sec
	24	PID controller differential time	0		0–1000	ms
	25	PID controller feed-forward compensation gain	0.0		0–1000	%
	26	Proportional gain scale	100.0		0.0–100.0	%
	27	PID output filter	0		0–10000	ms
	28	PID Mode	0		0 Process PID 1 Normal PID	-
	29	PID upper limit frequency	60.00		-300.00–300.00	Hz
	30	PID lower limit frequency	0.5		-300.00–300.00	Hz
	31	Anti Wind Up	0	No	0~1	-
	32	PID output scale	100.0		0.1–1000.0	%
	33	PID output inverse	0	No	0–1	-
	34	PID controller motion frequency	0.00		0–Max Frequency	Hz
	35	PID controller motion level	0.0		0.0–100.0	%
	36	PID controller motion delay time	600		0–9999	sec
	37	PID sleep mode delay time	60.0		0–999.9	sec
	38	PID sleep mode frequency	0.00		0–Max Frequency	Hz
	39	PID wake-up level	35		0–100	%
	40	PID wake-up mode selection	0	Below Level	0–2	-
	43	PID unit gain	100.0		0–300	%
	44	PID unit scale	2	x 1	0–4	-
	45	PID 2nd proportional gain	100.00		0–1000	%
In	65–72	Px terminal setting options	22 23 24	I-Term Clear PID Openloop P Gain2	0–52	-

Note

When the PID switch operation (switching from PID operation to general operation) enters the multi-function input, [%] values are converted to [Hz] values. The normal PID output, PID OUT, is unipolar, and is limited by AP.29 (PID Limit Hi) and AP.30 (PID Limit Lo). A 100.0% calculation of the PID OUT value is based on the dr.20 (MaxFreq) parameter setting.

PID Basic Operation Setting Details

<table>
<tr><th>Code and Features</th><th>Description</th></tr>
<tr><td>AP.01 App Mode</td><td>Set the code to 2 (Proc PID) to select functions for the process PID.</td></tr>
<tr><td>AP.16 PID Output</td><td>Displays the existing output value of the PID controller. The gain and scale that were set at AP.43–44 are applied on the display.</td></tr>
<tr><td>AP.17 PID Ref Value</td><td>Displays the existing reference value set for the PID controller. The gain and scale that were set at AP.43–44 are applied on the display.</td></tr>
<tr><td>AP.18 PID Fdb Value</td><td>Displays the input value of the PID controller that is included in the latest feedback. The gain and scale that were set at AP.43–44 are applied on the display.</td></tr>
<tr><td>AP.19 PID Ref Set</td><td>When AP.20 (PID control reference source) is set to 0 (Keypad), the reference value can be entered. If the reference source is set to any other value, the setting values for AP.19 are void.</td></tr>
<tr><td>AP.20 PID Ref Source</td><td>Selects the reference input for the PID control. If the V1 terminal is set to PID feedback source (PID F/B Source), the V1 terminal cannot be set to the PID reference source (PID Ref Source). To set V1 as a reference source, change the feedback source.
<table>
<tr><th colspan="2">Configuration</th><th>Function</th></tr>
<tr><td>0</td><td>Keypad</td><td>Keypad</td></tr>
<tr><td>1</td><td>V1</td><td>-10–10 V input voltage terminal</td></tr>
<tr><td>2</td><td>V2</td><td>-10–10 V input voltage terminal</td></tr>
<tr><td>3</td><td>V0</td><td>Volume dial input of keypad</td></tr>
<tr><td>4</td><td>I2</td><td>I2 4–20 mA input current terminal</td></tr>
<tr><td>5</td><td>Int. 485</td><td>RS-485 input terminal</td></tr>
<tr><td>7</td><td>FieldBus</td><td>Communication command via a communication option card</td></tr>
<tr><td>8</td><td>UserSeqLink</td><td>Link common areas with the output of user sequences</td></tr>
</table>
When using the keypad, the PID reference setting can be displayed at AP.17.</td></tr>
<tr><td>AP.21 PID F/B Source</td><td>Selects feedback input for PID control. Items can be selected as reference input, except the keypad input (Keypad-1 and Keypad-2). Feedback cannot be set to an input item that is identical to the item selected as the reference.</td></tr>
</table>

Code and Features	Description
	For example, when Ap.20 (Ref Source) is set to 1 (V1), for AP.21 (PID F/B Source), an input other than the V1 terminal must be selected.
AP.22 PID P-Gain, AP.26 P Gain Scale	Sets the output ratio for differences (errors) between reference and feedback. If the P-gain is set to 50%, then 50% of the error is output. The setting range for P-gain is 0.0-1,000.0%. For ratios below 0.1%, use AP.26 (P Gain Scale).
AP.23 PID I- Time	Sets the time to output accumulated errors. When the error is 100%, the time taken for 100% output is set. When the integral time (PID I-Time) is set to 1 second, 100% output occurs after 1 second of the error remaining at 100%. Differences in a normal state can be reduced by PID I Time. When the multi-function terminal block is set to 21 (I-Term Clear) and is turned on, all of the accumulated errors are deleted.
AP.24 PID D-Time	Sets the output volume for the rate of change in errors. If the differential time (PID D-Time) is set to 1 ms and the rate of change in errors per sec is 100%, output occurs at 1% per 10 ms.
AP.25 PID F-Gain	Sets the ratio that adds the target to the PID output. Adjusting this value leads to a faster response.
AP.27 PID Out LPF	Used when the output of the PID controller changes too fast or the entire system is unstable, due to severe oscillation. In general, a lower value (default value=0) is used to speed up response time, but in some cases a higher value increases stability. The higher the value, the more stable the PID controller output is, but the slower the response time.
AP.28 PID Mode	Adds the set target to the PID controller and sets the volume of the target.
AP.29 PID Limit Hi, AP.30 PID Limit Lo	Limits the output of the controller.
AP.31 Anti Wind Up	Limits the error accumulation (I Term) when the PID output saturates, so that the PID output responds quickly in situations where feedback is reduced.
AP.32 PID Out Scale	Adjusts the volume of the controller output.
AP.43 PID Unit Gain, AP.44 PID Unit Scale	Adjusts the size to fit the unit.

Code and Features	Description
AP.45 PID P2-Gain	The PID controller's gain can be adjusted using the multi-function terminal. When a terminal is selected from In.65–72 and set to 24 (P Gain2), and if the selected terminal is entered, the gain set in AP.22 and AP.23 can be switched to the gain set in AP.45.

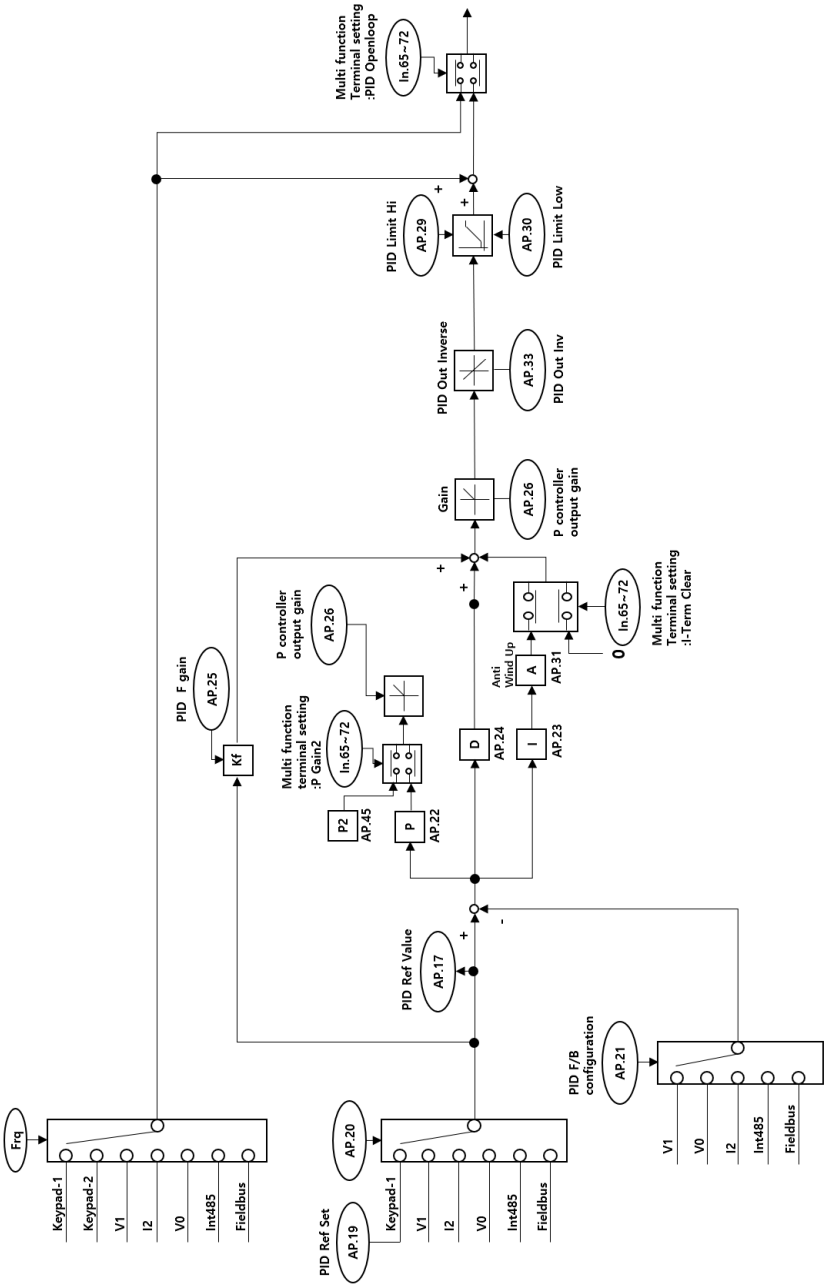

[PID control block diagram]

5.8.2 Pre-PID Operation

When an operation command is entered that does not include PID control, general acceleration occurs until the set frequency is reached. When the controlled variables increase to a particular point, the PID operation begins.

Pre-PID Operation Setting Details

Code and Features	Description
AP.34 Pre-PID Freq	When general acceleration is required without the PID control, enter the frequency up to the general acceleration. If Pre-PID Freq is set to 30 Hz, the general operation continues until the control variable (PID feedback variable) set at AP.35 is exceeded.
AP.35 Pre-PID Exit, AP.36 Pre-PID Delay	When the feedback variable of the PID controller is higher than the value set at AP.35, the PID control operation begins. However, when a value is set for AP.36 (Pre-PID Delay) and a feedback variable less than the value set at AP.36 is maintained for a set amount of time, the “pre-PID Fail” fault trip will occur and the output will be blocked.

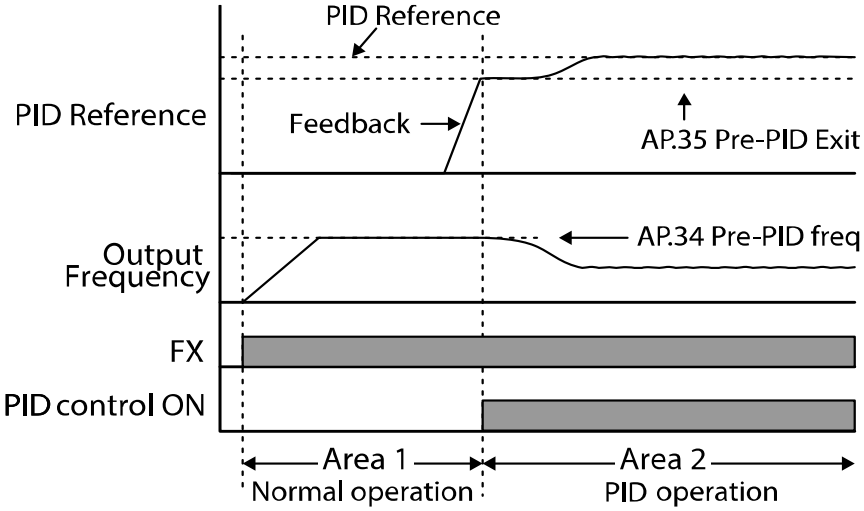

5.8.3 PID Operation Sleep mode

If the operation continues at a frequency lower than the set condition for PID operation, the PID operation sleep mode starts. When PID operation sleep mode starts, the operation will stop until the feedback exceeds the parameter value set at AP.39 (PID WakeUp Lev). The warning alarm(SLP) occurs When PID operation sleep mode.

PID Operation Sleep Mode Setting Details

Code and Features	Description
AP.37 PID Sleep DT, AP.38 PID Sleep Freq	If an operation frequency lower than the value set at AP.38 is maintained for the time set at AP.37, the operation stops and the PID operation sleep mode starts.
AP.39 PID WakeUp Lev, AP.40 PID WakeUp Mod	Starts the PID operation when in PID operation sleep mode. If AP.40 is set to 0 (Below Level), the PID operation starts when the feedback variable is less than the value set as the AP.39 parameter setting. If AP.40 is set to 1 (Above Level), the operation starts when the feedback variable is higher than the value set at AP.39. If AP.40 is set to 2 (Beyond Level), the operation starts when the difference between the reference value and the feedback variable is greater than the value set at AP.39.

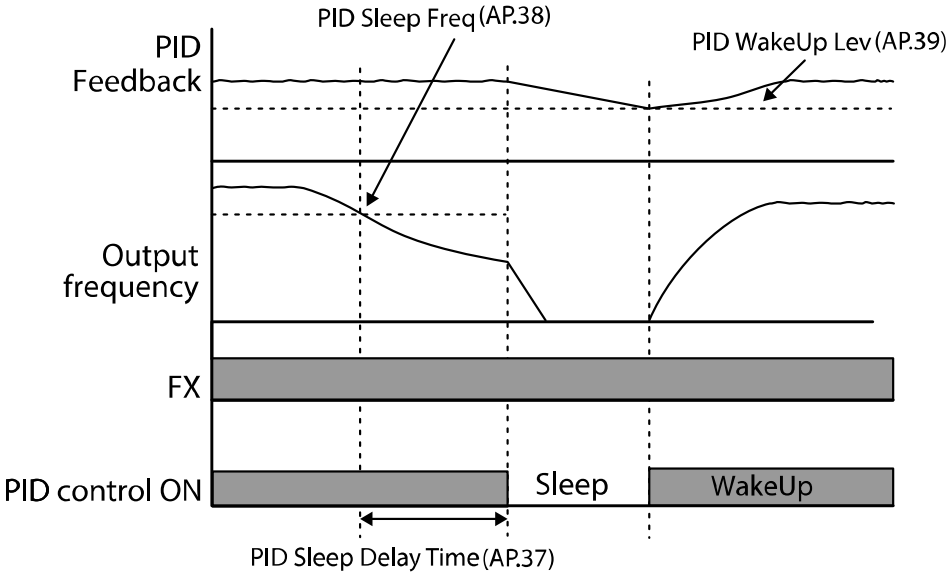

5.8.4 PID Switching (PID Openloop)

When one of the multi-function terminals (In.65–72) is set to 23 (PID Openloop) and is turned on, the PID operation stops and is switched to general operation. When the terminal turns off, the PID operation starts again.

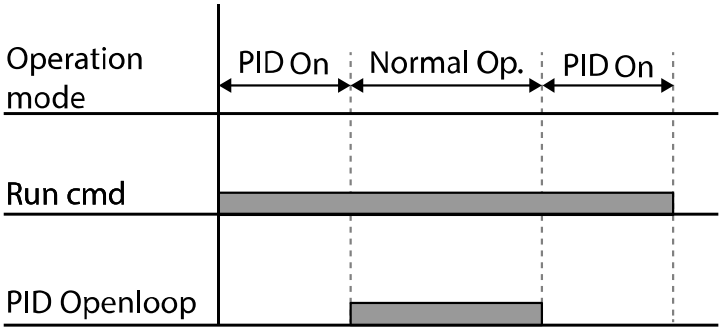

5.9 Auto-tuning

The motor parameters can be measured automatically and can be used for auto torque boost or sensorless vector control.

Example - Auto-Tuning Based on 0.75kW, 200V, 60Hz, 4 Pole Motor

Group	Code	Name	Setting		Setting Range	Unit
dr	14	Motor capacity	1	0.75 kW	0–15	-
bA	11	Number of motor poles	4		2–48	-
	12	Rated slip speed	70		0–3000	Rpm
	13	Motor rated current	3.3		1.0–1000.0	A
	14	Motor noload current	1.7		0.5–1000.0	A
	15	Motor rated voltage	220		170–480	V
	16	Motor efficiency	83		64–100	%
	20	Auto tuning	0	None	-	-
	21	Stator resistance	2.951		Depends on the motor setting	Ω
	22	Leakage inductance	25.20		Depends on the motor setting	mH
	23	Stator inductance	171.1		Depends on the motor setting	mH
	24	Rotor time constant	137		25–5000	ms

Auto-Tuning Default Settings

Motor Capacity (kW)		Rated Current (A)	No-load Current (A)	Rated Slip Frequency (Rpm)	Stator Resistance (Ω)	Leakage Inductance (mH)
200 V	0.2	1.1	0.8	100	14.0	40.4
	0.4	1.9	1.0	90	6.42	38.8
	0.75	3.3	1.7	70	2.951	25.20
	1.5	5.9	2.7	70	1.156	12.07
	2.2	8.6	3.9	50	0.809	6.44
	3.7	13.8	5.7	50	0.485	4.02
	5.5	20.0	6.2	50	0.283	3.24
	7.5	25.5	7.4	50	0.183	2.523
	11.0	40.0	12.4	30	0.1200	1.488
	15.0	53.6	15.5	30	0.0840	1.118
	18.5	65.6	19.0	30	0.0676	0.819
	22.0	76.8	21.5	30	0.0560	0.948
400 V	0.2	0.7	0.5	100	28.00	121.2
	0.4	1.1	0.6	90	19.40	117.0
	0.75	1.9	0.9	70	8.97	76.3
	1.5	3.4	1.7	70	3.51	37.3
	2.2	4.3	2.3	50	3.069	24.92
	3.7	6.9	3.2	50	1.820	15.36
	5.5	11.5	3.6	50	0.819	9.77
	7.5	15.0	4.4	50	0.526	7.58
	11.0	23.2	7.2	30	0.360	4.48
	15.0	31.0	9.0	30	0.250	3.38
	18.5	38.0	11.0	30	0.1680	2.457
	22.0	44.5	12.5	30	0.1680	2.844

Auto Tuning Parameter Setting Details

<table>
<tr><th>Code and Features</th><th>Description</th></tr>
<tr><td>bA.20 Auto Tuning</td><td>Select an auto tuning type and run it. Select one of the options and then press the [ENT] key to run the auto tuning.
<table>
<tr><th colspan="2">Configuration</th><th>Function</th></tr>
<tr><td>0</td><td>None</td><td>Auto tuning function is not enabled. If the auto tuning function is ran, this will indicate that the auto tuning is complete.</td></tr>
<tr><td>1</td><td>All (Rotation type)</td><td>Measures all motor parameters, including stator resistance (Rs), leakage inductance (Lsigma), stator inductance (Ls), no-load current (Noload Curr), and rotor time constant (Tr) while the motor is rotating.
As the motor is rotating while the parameters are being measured, if the load is connected to the motor spindle, the parameters may not be measured accurately. For accurate measurements, remove the load attached to the motor spindle. However, note that the rotor time constant (Tr) must be measured in a stopped position.
Rotational autotuning cannot be executed over communication.</td></tr>
<tr><td>2</td><td>All (static type)</td><td>Measures all parameters while the motor is in the stopped position. Measures stator resistance (Rs), leakage inductance (Lsigma), stator inductance (Ls), no-load current (Noload Curr), and rotor time constant (Tr).
As the motor is not rotating while the parameters are measured, the measurements are not affected when the load is connected to the motor spindle. However, when measuring parameters, do not rotate the motor spindle on the load side.
Stationary automatic tuning can be executed by communication.</td></tr>
<tr><td>3</td><td>Rs+Lsigma (rotating type)</td><td>Measures parameters while the motor is rotating. The measured motor parameters are used for sensorless vector control.
Rs+Lsigma auto-tuning is impossible to run by communication.</td></tr>
<tr><td>6</td><td>Tr (Static type)</td><td>Measures the rotor time constant (Tr) with the motor in the stopped position and Control Mode (dr.09) is set to 4 (IM Sensorless).
Stationary Tr automatic tuning can be performed by communication.</td></tr>
</table></td></tr>
</table>

Code and Features	Description
bA.14 Noload Curr, bA.21 Rs-bA.24 Tr	Displays motor parameters measured by auto tuning. For parameters that are not included in the auto tuning measurement list, the default setting will be displayed.

Caution

- Perform auto tuning ONLY after the motor has completely stopped running.
- Before you run auto tuning, check the motor pole number, rated slip, rated current, rated voltage and efficiency on the motor's rating plate and enter the data. The default parameter setting is used for values that are not entered.
- When measuring all parameters when motor is static after selecting 2[(All (Static type)] at bA20 (auto tuning), the accuracy is rather less than the method of selecting 1 (ALL) and measuring the parameters when the motor is rotating. This means that the performance sensorless operation may be lowered. Therefore, run static type auto tuning by selecting 2 (All) only when the motor cannot be rotated (when gearing and belts cannot be separated easily, or when the motor cannot be separated mechanically from the load).

5.10 Sensorless Vector Control for Induction Motors

Sensorless vector control is an operation to carry out vector control without the rotation speed feedback from the motor but with an estimation of the motor rotation speed calculated by the inverter. Compared to V/F control, sensorless vector control can generate greater torque at a lower level of current.

Group	Code	Name	Setting		Setting Range	Unit
dr	09	Control mode	4	IM Sensorless	-	-
	14	Motor capacity	Varies by Motor capacity		0–15	-
	18	Base frequency	60		30–400	Hz
bA	11	Number of motor poles	4		2–48	-
	12	Rated slip speed	Varies by Motor capacity		0–3000	Hz
	13	Motor rated current	Varies by Motor capacity		1–1000	A
	14	Motor noload current	Varies by Motor capacity		0.0–1000	A

Group	Code	Name	Setting		Setting Range	Unit
	15	Motor rated voltage	220/380/440/480		170–480	V
	16	Motor efficiency	Varies by Motor capacity		64–100	%
	20	Auto tuning	1	All	-	-
Cn	09	Initial excitation time	1.0		0.0–60.0	sec
	10	Initial excitation amount	100.0		100.0–300.0	%
	21	Low-speed torque compensation gain	Varies by Motor capacity		50–300	%
	22	Output torque compensation gain	Varies by Motor capacity		50–300	%
	23	Speed deviation compensation gain	Varies by Motor capacity		50–300	%
	24	Main compensation of speed deviation	Varies by Motor capacity		50–300	%
	29	No load speed deviation compensation gain	1.06		0.50–2.00	-
	30	Speed response adjustment gain	4.0		2.0–10.0	-
	53	Torque limit setting	0	Keypad-1	0–9	-
	54	Forward direction retrograde torque limit	180.0		0.0–300.0	%
	55	Forward direction regenerative torque limit	180.0		0.0–300.0	%
	56	Reverse direction regenerative torque limit	180.0		0.0–300.0	%
	57	Reverse direction retrograde torque limit	180.0		0.0–300.0	%

Caution

For high-performance operation, the parameters of the motor connected to the inverter output must be measured. Use auto tuning (bA.20 Auto Tuning) to measure the parameters before you run sensorless vector operation. To run high-performance sensorless vector control, the inverter and the motor must have the same capacity. If the motor capacity is smaller than the inverter capacity by more than two levels, control may be inaccurate. In that case, change the control mode to V/F control. When operating with sensorless vector control, do not connect multiple motors to the inverter output.

5.10.1 Sensorless Vector Control Operation Setting for Induction Motors

To run sensorless vector control operation, set dr.09 (Control Mode) to 4 (IM sensorless), select the capacity of the motor you will use at dr.14 (Motor Capacity), and select the appropriate codes to enter the rating plate information of the motor.

Code	Input (Motor Rating Plate Information)
dr.18 Base Freq	Base frequency
bA.11 Pole Number	Number of motor poles
bA.12 Rated Slip	Rated slip
bA.13 Rated Curr	Rated current
bA.15 Rated Volt	Rated voltage
bA.16 Efficiency	Efficiency (when no information is on the rating plate, default values are used.)

After setting each code, set bA.20 (Auto tuning) to 1 (All - rotation type) or 2 (All - static type) and run auto tuning. Because rotation type auto tuning is more accurate for 1[(All (Rotation type)] than 2[(All (Static type)], set 1[(All (Rotation type)] and run auto tuning if the motor can be rotated.

Note

Excitation Current
A motor can be operated only after magnetic flux is generated by current flowing through a coil. The power supply used to generate the magnetic flux is called the excitation current.
The stator coil that is used with the inverter does not have a permanent magnetic flux, so the magnetic flux must be generated by supplying an excitation current to the coil before operating the motor.

Sensorless Vector Control Operation Setting Details for Induction Motors

Code and Features	Description
Cn.09 Pre ExTime	Sets pre-excitation time. Pre-excitation is used to start the operation after performing excitation up to the motor's rated flux.
Cn.10 Flux Force	Allows for the reduction of the pre-excitation time. The motor flux increases up to the rated flux with the time constant as shown in the following figure. To reduce the time taken to reach the rated flux, a higher motor flux base value than the rated flux must be provided. When the magnetic flux reaches the rated flux, the provided motor flux base value is reduced. 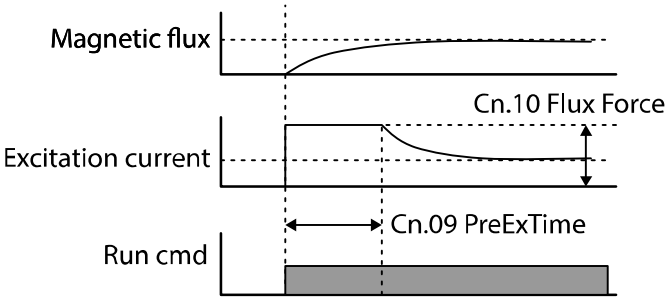
Cn.11 Hold Time	Sets the zero-speed control time (hold time) in the stopped position. The output is blocked after zero-speed operation for a set period when the motor decelerates and is stopped by a stop command. 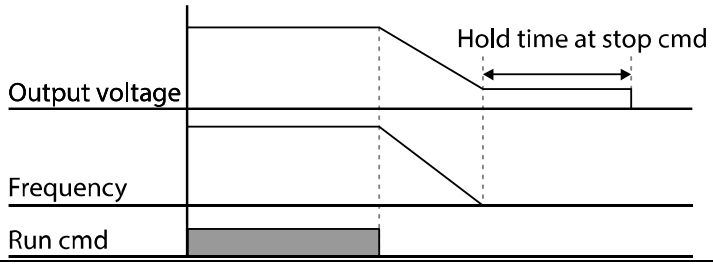
Cn.21 Out Trq. Comp. Gain at Low Spd	Cn.21 mainly has an effect on the low-speed operations. For details, refer to **p.164** in the **5.10.2 Sensorless Vector Control Operation Guide for Induction Motors**.
Cn.22 ScaleOut Trq. Comp. Gain	Cn.22 is related to the torque load quantity that can mostly be produced by the inverter. For details, refer to **p.164** in the **5.10.2 Sensorless Vector Control Operation Guide for Induction Motors**.
Cn.23 Spd. Comp. Sub Gain	Cn.23 mainly has an effect on the motor speed. For details, refer to **p.164** in the **5.10.2 Sensorless Vector Control Operation Guide for Induction Motors**.

<table>
<tr><th>Code and Features</th><th>Description</th></tr>
<tr><td>Cn.24 Spd. Comp. Main Gain</td><td>Cn.24 mainly has an effect on the motor speed. For details, refer to p.164 in the 5.10.2 Sensorless Vector Control Operation Guide for Induction Motors.</td></tr>
<tr><td>Cn.29 Spd. Comp. Gain at No-load</td><td>Cn.29 mostly has an effect on the error level of the estimated frequency during no load. For details, refer to p.164 in the 5.10.2 Sensorless Vector Control Operation Guide for Induction Motors.</td></tr>
<tr><td>Cn.30 Spd. Response Adjustment Gain</td><td>Cn.30 is the value that is mainly changed according to the load inertia. For details, refer to p.164 in the 5.10.2 Sensorless Vector Control Operation Guide for Induction Motors.</td></tr>
<tr><td>Cn.53 Torque Lmt Src</td><td>Select a type of torque limit setting, using the keypad, terminal block analog input (V1,V2,I2) or communication power. When setting torque limit, adjust the torque size by limiting the speed controller output. Set the retrograde and regenerative limits for forward and reverse operation.
<table>
<tr><th colspan="2">Configuration</th><th>Function</th></tr>
<tr><td>0</td><td>KeyPad-1</td><td rowspan="2">Sets the torque limit with the keypad.</td></tr>
<tr><td>1</td><td>KeyPad-2</td></tr>
<tr><td>2</td><td>V1</td><td>Sets the torque limit with the V1 input terminal of the terminal block.</td></tr>
<tr><td>3</td><td>V2</td><td>Sets the torque limit with the V2 input terminal of the terminal block.</td></tr>
<tr><td>4</td><td>V0</td><td>Sets the torque limit with the volume dial of keypad.</td></tr>
<tr><td>5</td><td>I2</td><td>Sets the torque limit with the I2 input terminal of the terminal block.</td></tr>
<tr><td>6</td><td>Int 485</td><td>Sets the torque limit with the communication terminal of the terminal block.</td></tr>
<tr><td>8</td><td>FieldBus</td><td>Sets the torque limit with the Fieldbus communication option.</td></tr>
<tr><td>9</td><td>UserSeqLink</td><td>Sets the torque limit by linking the common area with the user sequence output.</td></tr>
</table>
The torque limit can be set up to 200% of the rated motor torque.</td></tr>
<tr><td>Cn.54 FWD +Trq Lmt</td><td>Sets the torque limit for forward motoring operation.</td></tr>
<tr><td>Cn.55 FWD –Trq Lmt</td><td>Sets the torque limit for forward braking operation.</td></tr>
<tr><td>Cn.56 REV +Trq Lmt</td><td>Sets the torque limit for reverse braking operation.</td></tr>
<tr><td>Cn.57 REV –Trq Lmt</td><td>Sets the torque limit for reverse motoring operation.</td></tr>
<tr><td>In.02 Torque at 100%</td><td>Sets the maximum torque.
For example, if In.02 is set to 200% and an input voltage (V1) is used, the torque limit is 200% when 10 V is entered.</td></tr>
</table>

Caution

Gain value can be adjusted according to the load characteristics. However, use with caution because motor overheating and system instability may occur depending on the Gain value settings.

5.10.2 Sensorless Vector Control Operation Guide for Induction Motors

Problem	Relevant Function Code	Troubleshooting
If the number of motor rotations drops due to the lack of torque	Cn.22 Out Trq. Comp. Gain	If there is a severe drop in the motor rotation to 36 RPM or more, increase the Cn.22 Out Trq. Comp. Gain value in 10% units.
If the motor rotation count error factor is 18 RPM or greater even though there is a sufficient amount of torque.	Cn.23 Spd. Comp. Sub Gain Cn.24 Spd. Comp. Main Gain	Change the Cn.24 Spd. Comp. Main Gain value in 5% units. Refer to the load-rotation count gradient according to the Cn.24 Spd. Comp. Main Gain value below. Example: The gradient slants counterclockwise as the Cn.24 Spd. Comp. Main Gain value increases. 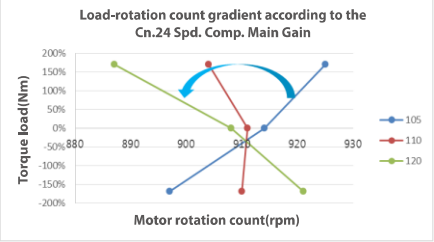 Change the Cn.23 Spd. Comp. Sub Gain value in 5% units. Refer to the load-rotation count gradient according to the Cn.23 Spd. Comp. Sub Gain value below. Example: The gradient slants clockwise as Cn.23 Spd. Comp. Sub Gain value increases. 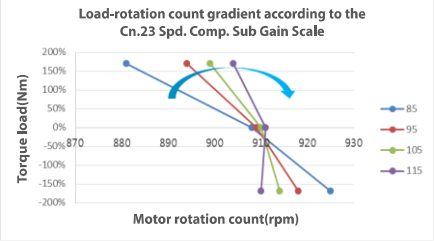

Problem	Relevant Function Code	Troubleshooting
If torque is lacking due to a load increase in low speed (5 Hz or less)	Cn.21 Out Trq. Comp. Gain at Low Spd	If torque is lacking under low speed, increase the Cn.21 value in 5% units.
If rotating in reverse direction due to a load increase in low speed (5 Hz or less)	Cn.21 Out Trq. Comp. Gain at Low Spd	If rotating in reverse direction due to a load increase in low speed, decrease the Cn.21 value 5% at a time.
If low speed (3 Hz or less) out-of-phase occurs because the inertia of load is high.	Cn.30 Spd. Response Adjustment Gain	Sometimes control is not possible under a low speed due to high load inertia. In this case, increase the Cn.30 value by 1 unit at a time.
If motor rotation count error margin occurs during no load	Cn.29 Spd. Comp. Gain at No-load	If over 10 RPM of motor rotation count error occurs during no load operation, adjust the Cn.29 value by 0.01 unit at a time.
If speed response is required	Cn.30 Spd.Response Adjustment Gain	Although the speed response is improved the greater the Cn.30 value, speed control may become unstable. Excessive setup may cause an inverter trip.

5.11 Energy Buffering Operation (Kinetic Energy Buffering)

When the input power supply is disconnected, the inverter's DC link voltage decreases, and a low voltage trip occurs blocking the output. A kinetic energy buffering operation uses regenerative energy generated by the motor during the blackout to maintain the DC link voltage. This extends the time for a low voltage trip to occur, after an instantaneous power interruption. For the KEB feature to operate properly, bA.19 input power voltage parameter must be set to match the voltage of input power.

Group	Code	Name	Setting		Setting Range	Unit
bA	19	Input power voltage settings	220/380		170–480	V
Cn	77	Energy buffering selection	0	None	0–2	-
			1	KEB-1		
			2	KEB-2		
	78	Energy buffering start level	125.0		110.0–200.0	%
	79	Energy buffering stop level	130.0		Cn.78–210.0	%
	80	Energy buffering P gain	1000		1–20000	-
	81	Energy buffering I gain	500		0–20000	-
	82	Energy buffering Slip gain	30.0		0–2000.0	%
	83	Energy buffering restoration frequency	10.0		0.0–600.0	sec
In	65 –72	Px terminal function setting	52	KEB-1 Select	-	-

Kinetic Energy Buffering Operation Setting Details

<table>
<tr><th>Code and Features</th><th>Description</th></tr>
<tr><td>Cn.77
KEB Select</td><td>Select the kinetic energy buffering operation when the input power is disconnected. If 1 or 2 is selected, it controls the inverter's output frequency and charges the DC link (inverter's DC part) with energy generated from the motor. Also, this function can be set using a terminal input. From the Px terminal function settings, select KEB-1 Select, and then turn on the terminal block to run the KEB-1 function. (If KEB-1 Select is selected, KEB-1 or KEB-2 cannot be set in Cn.77.)
<table>
<tr><th colspan="2">Configuration</th><th>Function</th></tr>
<tr><td>0</td><td>None</td><td>General deceleration is carried out until a low voltage trip occurs.</td></tr>
<tr><td>1</td><td>KEB-1</td><td>When the input power is blocked, it charges the DC link with regenerated energy. When the input power is restored, it restores normal operation from the energy buffering operation to the frequency reference operation. KEB Acc Time in Cn.83 is applied as the operation frequency acceleration time when restoring to the normal operation.</td></tr>
<tr><td>2</td><td>KEB-2</td><td>When the input power is blocked, it charges the DC link with regenerated energy. When the input power is restored, it changes from the energy buffering operation to the deceleration stop operation. The Dec Time in dr.04 is applied as the operation frequency deceleration time during the deceleration stop operation.</td></tr>
</table></td></tr>
</table>

Code and Features	Description
	[KEB-1] 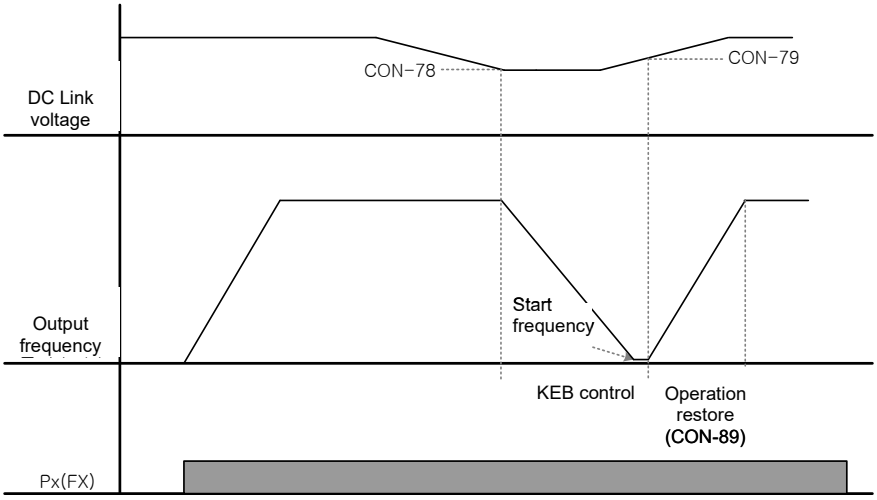 [KEB-2] 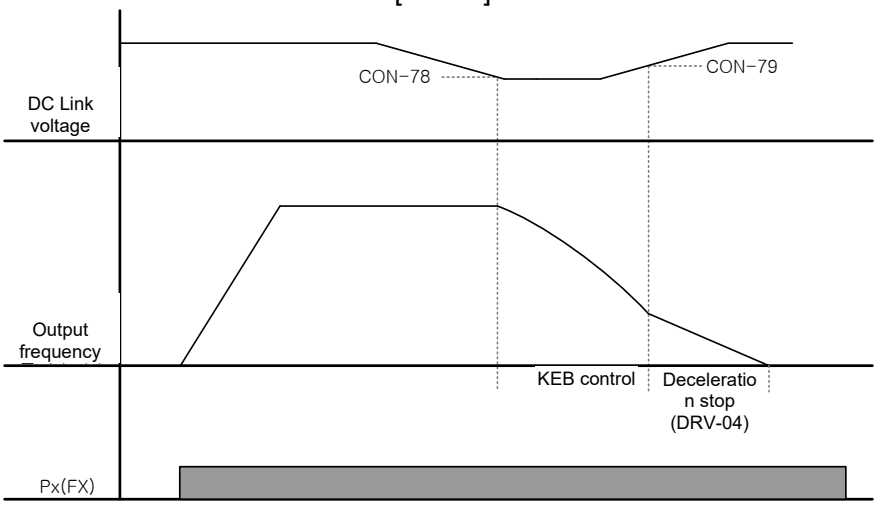
Cn.78 KEB Start Lev, Cn.79 KEB Stop Lev	Sets the start and stop points of the kinetic energy buffering operation. The set values must be based on the low voltage trip level as 100% and the stop level (Cn.79) must be set higher than the start level (Cn.78).
Cn.80 KEB P Gain	The controller P Gain is for maintaining the voltage of the DC power section during the kinetic energy buffering operation. Change the setting value when a low voltage trip occurs right after a power failure.
Cn.81 KEB I Gain	The controller I Gain is for maintaining the voltage of the DC power section during the kinetic energy buffering operation. Sets the gain value to maintain the frequency during the kinetic energy buffering operation until the inverter stops.

Code and Features	Description
Cn.82 KEB Slip Gain	The slip gain is for preventing a low voltage trip due to load when the kinetic energy buffering operation start from blackout.
Cn.83 KEB Acc Time	Set the acceleration time of the operation frequency when it returns to normal operation from the energy buffering operation when the KEB-1 mode is selected and the input power is restored.

Note

- The performance of KEB function may vary depending on the loads (capacity, inertia, etc...). You can set a KEB Gain value for better performances.
- A low voltage trip may occur immediately after a power interruption if the load is too high or the load inertia is too low. In this case, you can improve the performance by increasing the KEB I Gain value or the KEB Slip Gain value.
- If the motor vibrates or the current fluctuation increases after a power interruption, you can improve the performance by increasing the KEB P Gain value or lowering the KEB I Gain value.

Caution

Depending on the duration of Instantaneous power interruptions and the amount of load inertia, a low voltage trip may occur even during a kinetic energy buffering operation. Motors may vibrate during kinetic energy buffering operation for some loads except variable torque load (for example, fan or pump loads).

5.12 Energy Saving Operation

5.12.1 Manual Energy Saving Operation

If the inverter output current is lower than the current which is set at bA.14 (Noload Curr), the output voltage must be reduced as low as the level set at Ad.51 (Energy Save). The voltage before the energy saving operation starts will become the base value of the percentage. Manual energy saving operation will not be carried out during acceleration and deceleration.

Group	Code	Name	Setting		Setting Range	Unit
Ad	50	Energy saving operation	1	Manual	-	-
	51	Energy saving amount	30		0–30	%

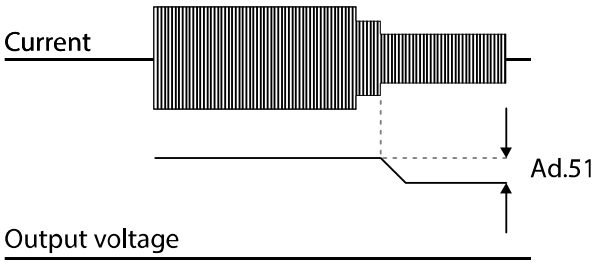

5.12.2 Automatic Energy Saving Operation

The amount of energy saving can be automatically calculated based on the rated motor current (bA.13) and the no-load current (bA.14). From the calculations, the output voltage can be adjusted.

Group	Code	Name	Setting		Setting Range	Unit
Ad	50	Energy saving operation	2	Auto	-	-

Caution

If operation frequency is changed or acceleration and /deceleration is carried out by a stop command during the energy saving operation, the actual Acc/Dec time may take longer than the set Acc/Dec time due to the time required to return to the general operation from the energy saving operation.

5.13 Speed Search Operation

This operation is used to prevent fault trips that can occur while the inverter output voltage is disconnected and the motor is idling. Because this feature estimates the motor rotation speed based on the inverter output current, it does not give the exact speed.

Group	Code	Name	Setting		Setting Range	Unit
Cn	70	Speed search mode selection	0	Flying Start-1	-	-
			1	Flying Start-2		
	71	Speed search operation selection	0000*		-	bit
	72	Speed search reference current	150		80–200	%
	73	Speed search proportional gain	100		0–9999	-
	74	Speed search integral gain	200		0–9999	-
	75	Output block time before speed search	1.0		0–60	sec
OU	31	Multi-function relay 1 item	19	Speed Search	-	-
	33	Multi-function relay 2 item**				

*Displayed as 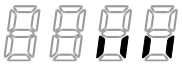 on the Keypad.

**G100C series models support Q1/EG open collector output terminal as a substitute for A2/C2 relay terminal 2

Speed Search Operation Setting Details

<table>
<tr><th>Code and Features</th><th>Description</th></tr>
<tr><td>Cn.70 SS Mode</td><td>Select a speed search type.
<table>
<tr><th colspan="2">Configuration</th><th>Function</th></tr>
<tr><td>0</td><td>Flying Start-1</td><td>The speed search is carried out as it controls the inverter output current during idling below the Cn.72 (SS Sup-Current) parameter setting. If the direction of the idling motor and the direction of operation command at restart are the same, a stable speed search function can be performed at about 10 Hz or lower. However, if the direction of the idling motor and the direction of operation command at restart are different, the speed search does not produce a satisfactory result because the direction of idling cannot be established.</td></tr>
<tr><td>1</td><td>Flying Start-2</td><td>The speed search is carried out as it PI controls the ripple current which is generated by the counter electromotive force during no-load rotation. Because this mode establishes the direction of the idling motor (forward/reverse), the speed search function is stable regardless of the direction of the idling motor and direction of operation command. However because the ripple current is used which is generated by the counter electromotive force at idle (the counter electromotive force is proportional to the idle speed), the idle frequency is not determined accurately and re-acceleration may start from zero speed when the speed search is performed for the idling motor at low speed (about 10–15 Hz, though it depends on motor characteristics).</td></tr>
</table></td></tr>
<tr><td>Cn.71 Speed Search</td><td>Speed search can be selected from the following 4 options. If the top display segment is on it is enabled (On), and if the bottom segment is on it is disabled (Off).
<table>
<tr><th>Items</th><th>Bit On Status</th><th>Bit Off Status</th></tr>
<tr><td>Keypad</td><td> </td><td> </td></tr>
</table></td></tr>
</table>

Code and Features	Description
	Type and Functions of Speed Search Setting

Configuration				Function
bit4	bit3	bit2	bit1	
			✓	Speed search for general acceleration
		✓		Initialization after a fault trip
	✓			Restart after instantaneous power interruption
✓				Starting with power-on

- **Speed search for general acceleration:** If bit 1 is set to 1 and the inverter operation command runs, acceleration starts with speed search operation. When the motor is rotating under load, a fault trip may occur if the operation command is run for the inverter to provide output voltage. The speed search function prevents such fault trip from occurring.

- **Initialization after a fault trip:** If Bit 2 is set to 1 and Pr.08 (RST Restart) is set to 1 (Yes), the speed search operation automatically accelerates the motor to the operation frequency used before the fault trip, when the [Reset] key is pressed (or the terminal block is initialized) after a fault trip.
- **Automatic restart after reset of a fault trip:** If bit 3 is set to 1, and if a low voltage trip occurs due to a power interruption but the power is restored before the internal power shuts down, the speed search operation accelerates the motor back to its frequency reference before the low voltage trip.

  If an instantaneous power interruption occurs and the input power is disconnected, the inverter generates a low voltage trip and blocks the output. When the input power returns, the operation frequency before the low voltage trip and the voltage is increased by the inverter's inner PI control.

  If the current increases above the value set at Cn.72, the voltage stops increasing and the frequency decreases (t1 zone). If the current decreases below the value set at Cn.72, the voltage increases again and the frequency stops decelerating (t2 zone). When the normal frequency and voltage are resumed, the speed search operation accelerates the motor back to its frequency reference before the fault trip.

Code and Features	Description
	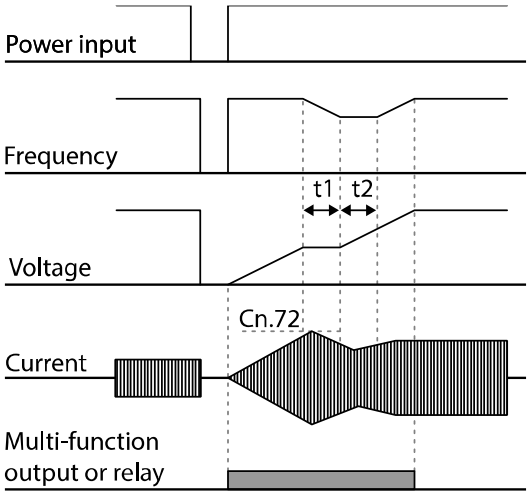 • **Starting with power-on:** Set bit 4 to 1 and Ad.10 (Power-on Run) to 1 (Yes). If inverter input power is supplied while the inverter operation command is on, the speed search operation will accelerate the motor up to the frequency reference.
Cn.72 SS Sup-Current	The amount of current flow is controlled during speed search operation based on the motor's rated current. If Cn.70 (SS mode) is set to 1 (Flying Start-2), this code is not visible.
Cn.73 SS P/I-Gain, Cn.75 SS Block Time	The P/I gain of the speed search controller can be adjusted. If Cn.70 (SS Mode) is set to 1 (Flying Start-2), different factory defaults based on motor capacity are used and defined in dr.14 (Motor Capacity).

Note

- If operated within the rated output, the G100 series inverter is designed to withstand instantaneous power interruptions within 15 ms and maintain normal operation. Based on the rated heavy load current, safe operation during an instantaneous power interruption within 15ms is guaranteed for 200 V and 400 V inverters (whose rated input voltages are 200–230 VAC and 380–460 VAC respectively).
- The DC voltage inside the inverter may vary depending on the output load. If the power interruption time is longer than 15 ms, a low voltage trip may occur.

Caution

When operating in sensorless mode for the load that works in free-run, the speed search function (for general acceleration) must be set for smooth operation. If the speed search function is not set, an overcurrent trip or overload trip may occur.

5.14 Auto Restart Settings

When inverter operation stops due to a fault and a fault trip is activated, the inverter automatically restarts based on the parameter settings.

Group	Code	Name	Setting	Setting Range	Unit
Pr	08	Selection of startup on trip reset	0 | No	0–1	-
	09	Number of automatic restarts	0	0–10	-
	10	Auto restart delay time	1.0	0.0–60.0	sec
Cn	71	Speed search operation selection	-	0000*–1111	bit
	72	Speed search reference current	150	80–200	%
	73	Speed search proportional gain	100	0–9999	
	74	Speed search integral gain	200	0–9999	
	75	Output block time before speed search	1.0	0.0–60.0	sec

*Displayed as 0000 1111 on the Keypad.

Auto Restart Setting Details

Code and Features	Description
Pr.08 RST Restart, Pr.09 Retry Number, Pr.10 Retry Delay	Only operates when Pr.08 (RST Restart) is set to 1 (Yes). The number of attempts to try the auto restart is set at Pr.09 (Auto Restart Count). If a fault trip occurs during operation, the inverter automatically restarts after the set time programmed at Pr.10 (Retry Delay). At each restart, the inverter counts the number of tries and subtracts it from the number set. Once the retry number count reaches 0, the automatic restart is not conducted. After an auto restart, if a fault trip does not occur within 60 sec, it will increase the restart count number. The maximum number of increase is limited by the number set for Auto Restart Count. If the inverter stops due to low voltage, emergency stop (BX), inverter overheating, or hardware diagnosis, an auto restart is not activated. At auto restart, the acceleration options are identical to those of speed search operation. Codes Cn.72–75 can be set based on the load. Information about the speed search function can be found at **5.13 Speed Search Operation** on page **171**.

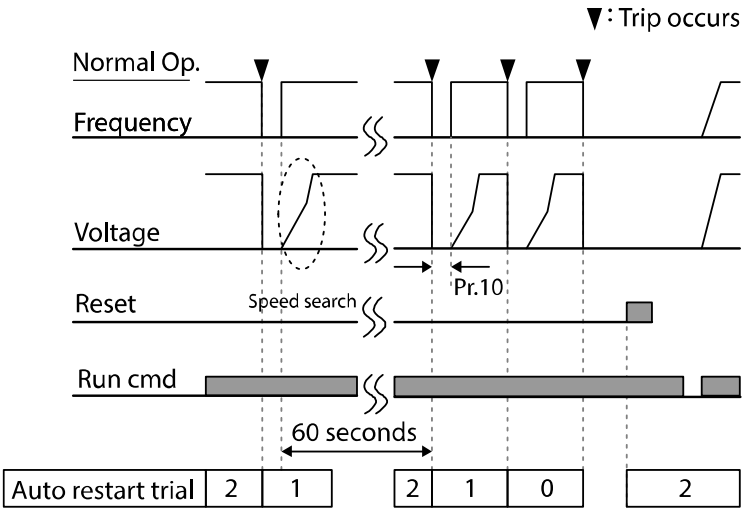

[Example of auto restart with a setting of 2]

Caution

If the auto restart number is set, be careful when the inverter resets from a fault trip. The motor may automatically start to rotate.

5.15 Operational Noise Settings (Change of Carrier Frequency Settings)

Group	Code	Name	Setting Range		Unit
Cn	04	Carrier Frequency	0.4kW~4.0kW	2.0~15.0	kHz
			5.5kW~22kW	1.0~15.0	

Operational Noise Setting Details

Code and Features	Description
Cn.04 Carrier Freq	Adjust motor operational noise by changing carrier frequency settings. Power transistors (IGBT) in the inverter generate and supply high frequency switching voltage to the motor. The switching speed in this process refers to the carrier frequency. If the carrier frequency is set high, it reduces operational noise from the motor, and if the carrier frequency is set low, it increases operational noise from the motor.

Refer to the table below for the change of carrier frequency settings according to the load level, control mode, and capacity.

Capacity	Heavy Duty					Normal Duty				
	Setting Range				Initial Value	Setting Range				Initial Value
	V/F		S/L			V/F		S/L		
	Minimum	Maximum	Minimum	Maximum		Minimum	Maximum	Minimum	Maximum	
0.4~4.0kW	2	15	2	15	3	2	5	2	5	2
5.5~22kW	1	15	2	15		1	5	2	5	

Note

Factory default carrier frequency

- Normal Duty: 2 kHz(Max 5 kHz)
- Heavy load: 3 kHz(Max 15 kHz)

G100 Series Inverter Derating Standard

- G100 inverter is designed to respond to two types of load rates. Heavy load (heavy duty) and normal load (normal duty). The overload rate represents an acceptable load amount that exceeds rated load, and is expressed in a ratio based on the rated load and the duration. The overload capacity on the G100 series inverter is 150%/1min for heavy loads, and 120%/1min for normal loads. The current rating differs from the load rating, as it also has an ambient temperature limit. For derating specifications, refer to **11.8 Continuous Rated Current Derating** on page **384**.

- Current rating for ambient temperature at normal load operation.

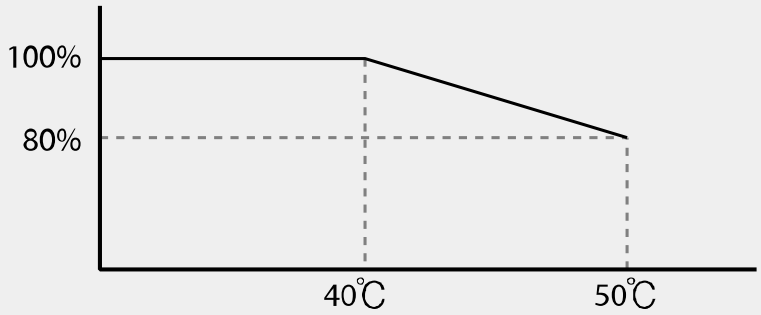

- Below shows the carrier frequency rated current guaranteed area according to the load.

Inverter capacity	Normal load	Heavy load
0.4~2.2kW-2/4, 4.0kW-4	2 kHz	6 kHz
4.0kW-2, 5.5~7.5kW-2/4, 11.0~22.0kW-2/4	2 kHz	4 kHz

5.16 2nd Motor Operation

The 2nd motor operation is used when a single inverter switch operates two motors. Using the 2nd motor operation, a parameter for the 2nd motor is set. The 2nd motor is operated when a multi-function terminal input defined as a 2nd motor function is turned on.

Group	Code	Name	Setting		Setting Range	Unit
In	65–72	Px terminal setting options	26	2nd Motor	0–52	-

2nd Motor Operation Setting Details

Code and Features	Description
In.65–72 Px Define	Set one of the multi-function input terminals to 26 (2nd Motor) to display M2 (2nd motor group) group. An input signal to a multi-function terminal set to 2nd motor will operate the motor according to the code settings listed below. However, if the inverter is in operation, input signals to the multi-function terminals will not read as a 2nd motor parameter. Pr.50 (Stall Prevent) must be set first, before M2.28 (Stall Lev) settings can be used. Also, Pr.40 (ETH Trip Sel) must be set first, before M2.29 (ETH 1min) and M2.30 (ETH Cont) settings.

Parameter Setting at Multi-function Terminal Input on a 2nd Motor

Code and Features	Description	Code	Description
M2.04 Acc Time	Acceleration time	M2.16 Inertia Rt	Load inertia rate
M2.05 Dec Time	Deceleration time	M2.17 Rs	Stator resistance
M2.06 Capacity	Motor capacity	M2.18 Lsigma	Leakage inductance
M2.07 Base Freq	Motor base frequency	M2.19 Ls	Stator inductance
M2.08 Ctrl Mode	Control mode	M2.20 Tr	Rotor time constant
M2.10 Pole Num	Pole number	M2.25 V/F Patt	V/F pattern
M2.11 Rate Slip	Rated slip	M2.26 Fwd Boost	Forward Torque boost
M2.12 Rated Curr	Rated current	M2.27 Rev Boost	Reverse torque boost
M2.13 Noload Curr	No-load Current	M2.28 Stall Lev	Stall prevention level
M2.14 Rated Volt	Motor rated voltage	M2.29 ETH 1min	Electronic thermal 1 minute rating
M2.15 Efficiency	Motor efficiency	M2.30 ETH Cont	Electronic thermal continuous rating

Example - 2nd Motor Operation

Use the 2nd motor operation when switching operation between a 7.5 kW motor and a secondary 3.7 kW motor connected to terminal P3. Refer to the following settings.

Group	Code	Name	Setting		Setting Range	Unit
In	67	P3 terminal function setting	26	2nd Motor	-	-
M2	06	Motor capacity	-	3.7 kW	-	-
	08	Control mode	0	V/F	-	-

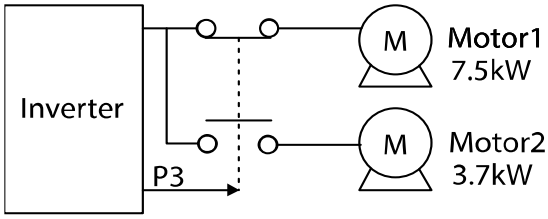

5.17 Commercial Power Source Transition

Supply power transition is used to switch the power source for the motor connected to the inverter from the inverter output power to the main supply power source (commercial power source), or vice versa.

Group	Code	Name	Setting		Setting Range	Unit
In	65–72	Px terminal setting options	16	Exchange	0–52	-
OU	31	Multi-function relay 1 item	17	Inverter Line	-	-
	33	Multi-function relay 2 item*	18	Comm Line	-	-

* G100C filter series models support Q1/EG open collector output terminal as a substitute for A2/C2 relay terminal 2.

Supply Power Transition Setting Details

Code and Features	Description
In.65–72 Px Define	When the motor power source changes from inverter output to main supply power, select a terminal to use and set the code value to 16 (Exchange). Power will be switched when the selected terminal is on. To reverse the transition, switch off the terminal.
OU.31 Relay 1 – OU.33 Relay 2	This function sets the multi-function relay to the no. 17 inverter line and no. 18 comm line. Relay operation sequence is as follows. 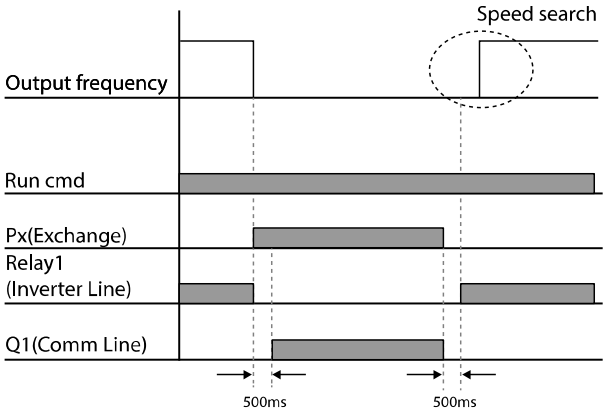

5.18 Cooling Fan Control

This function turns the inverter's heat-sink cooling fan on and off. It is used in situations where the load stops and starts frequently, or noise free environment is required. The correct use of cooling fan control can extend the cooling fan's life.

Group	Code	Name	Setting		Setting Range	Unit
Ad	64	Cooling fan control	0	During Run	0–2	-

Cooling Fan Control Detail Settings

Code and Features	Function		
	Configuration		Function
Ad.64 Fan Control	0	During Run	Cooling fan runs when the power is supplied to the inverter and the operation command is on. The cooling fan stops when the power is supplied to the inverter and the operation command is off. When the inverter heat sink temperature is higher than its set value, the cooling fan operates automatically regardless of its operation status.

Code and Features	Function		
	1	Always On	Cooling fan runs constantly if the power is supplied to the inverter.
	2	Temp Control	With power connected and the run operation command on, if the setting is in Temp Control, the cooling fan will not operate unless the temperature in the heat sink reaches the set temperature.

Note

Despite setting Ad.64 to 0 (During Run), if the heat sink temperature reaches a set level by current input harmonic wave or noise, the cooling fan may run as a protection function.

5.19 Input Power Frequency and Voltage Settings

Select the frequency for inverter input power. If the frequency changes from 60 Hz to 50 Hz, the frequencies set above 60 Hz including the maximum frequency and base frequency will change to 50 Hz. Likewise, changing the input power frequency setting from 50 Hz to 60 Hz will change all related function item settings from 50 Hz to 60 Hz.

Group	Code	Name	Setting		Setting Range	Unit
bA	10	input power frequency	0	60 Hz	0–1	-

Set Inverter input power voltage. Low voltage fault trip level changes automatically to the set voltage standard.

Group	Code	Name	Setting		Setting Range	Unit
bA	19	Input power voltage	200 V level	220	170–240	V
			400 V level	380	320–480	

5.20 Parameter save

The parameters the user has changed through the compatible common area are not saved in the inverter memory. They are used for saving the changed parameter into the inverter memory after changing the compatible common area parameter. The parameters cannot be saved if the inverter is operating.

Group	Code	Name	Setting		Setting Range	Unit
dr	92	Parameter save	0	None	0~1	-
			1	Parameter save		

5.21 Parameter Initialization

The parameter changed by the user can be initialized to the factory default settings. Initialize the data of all groups or initialize data by selecting specific groups. However, during a fault trip situation or operation, parameters cannot be initialized.

Group	Code	Name	Setting		Setting Range	Unit
dr	93	Parameter initialization	0	No	0–14	-

Parameter Initialization Setting Details

Code and Features	Description		
	Configuration		Function
dr.93 Parameter Init	0	No	-
	1	Initialize all groups	Initialize all data. Select 1 (All Grp) and press [PROG/ENT] key to start initialization. On completion, 0 (No) will be displayed.
	2	Initialize dr group	Initialize data by groups. Select initialize group and press [PROG/ENT] key to start initialization. On completion, 0 (No) will be displayed.
	3	Initialize bA group	
	4	Initialize Ad group	
	5	Initialize Cn group	
	6	Initialize In group	
	7	Initialize OU group	
	8	Initialize CM group	
	9	Initialize AP group	
	12	Initialize Pr group	
	13	Initialize M2 group	
	14	Initialize Operation Group	

5.22 Parameter Lock

Use parameter view lock to hide parameters after registering and entering a user password.

Group	Code	Name	Setting	Setting Range	Unit
dr	94	Password registration	-	0–9999	-
	95	Parameter lock settings	-	0–9999	-

Parameter Lock Setting Details

<table>
<tr><th>Code and Features</th><th>Description</th></tr>
<tr><td>dr.94
Password Registration</td><td>Register a password to prohibit parameter modifications. Follow the procedures below to register a password.
<table>
<tr><th>Step</th><th>Procedures</th></tr>
<tr><td>1</td><td>Press the [ENT] key on dr.94 code and the saved password input window will be displayed. If password registration is being made for the first time, enter 0. It is the factory default.</td></tr>
<tr><td>2</td><td>If a saved password has been set, enter the saved password.</td></tr>
<tr><td>3</td><td>If the entered password matches the saved password, then a new window to enter a new password will be displayed. (The process will not move to next stage until the user enters a valid password).</td></tr>
<tr><td>4</td><td>Register a new password.</td></tr>
<tr><td>5</td><td>After registration, Code dr.94 will be displayed.</td></tr>
</table></td></tr>
<tr><td>dr.95
Parameter Lock Settings</td><td>Press the [ENT] key when the change prevention feature is disabled, and UL (Unlocked) is displayed. Press the [ENT] key again a field to input password is shown. Enter the password and the Locked display is shown. Even if you press [ENT] key from the function code to change the parameter, this will not be changed to edit mode. Enter password again to display UL (Unlocked). The change prevention feature is disabled.</td></tr>
</table>

Caution

If parameter view lock and parameter lock functions are enabled, no inverter operation related function changes can be made. It is very important that you memorize the password.

5.23 Changed Parameter Display

This feature displays all the parameters that are different from the factory defaults. Use this feature to track changed parameters.

Group	Code	Name	Setting		Setting Range	Unit
dr	89	Changed parameter display	0	View All	-	-

Changed Parameter Display Setting Details

Code and Features	Description		
dr.89 Changed Para	Configuration		Function
	0	View All	Display all parameters
	1	View Changed	Display changed parameters only

5.24 Timer Settings

Set a multi-function input terminal to a timer and On/Off control the multi-function output and relay according to the timer settings.

Group	Code	Name	Setting		Setting Range	Unit
In	65–72	Px terminal setting options	38	Timer In	0–52	-
OU	31	Multi-function relay 1 item	28	Timer Out	-	-
	33	Multi-function relay 2 item*				
	55	Timer On delay	3.00		0.00–100	sec
	56	Timer Off delay	1.00		0.00–100	sec

* G100C series models support Q1/EG open collector output terminal as a substitute for A2/C2 relay terminal 2.

Timer Setting Details

Code and Features	Description
In.65–72 Px Define	Choose one of the multi-function input terminals and change it to a timer terminal by setting it to 38 (Timer In).
OU.31 Relay1, OU.33 Relay 2	Set multi-function output terminal or relay to be used as a timer to 28 (Timer out).
OU.55 TimerOn Delay, OU.56 TimerOff Delay	Input a signal (On) to the timer terminal to operate a timer output (Timer out) after the time set at OU.55 has passed. When the multi-function input terminal is off, multi-function output or relay turns off after the time set at OU.56.

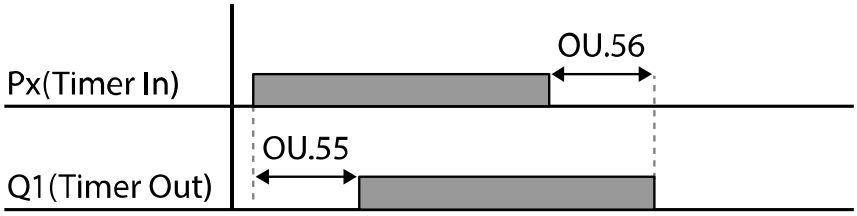

5.25 Brake Control

This feature controls the On/Off operation of the load's electronic braking system.

Group	Code	Name	Setting		Setting Range	Unit
Ad	41	Brake release current	50.0		0.0–180%	%
	42	Brake release delay time	1.00		0.0–10.0	sec
	44	Brake release Forward frequency	1.00		0–Max Frequency	Hz
	45	Brake release Reverse frequency	1.00		0–Max Frequency	Hz
	46	Brake engage delay time	1.00		0.00–10.00	sec
	47	Brake engage frequency	2.00		0–Max Frequency	Hz
OU	31	Multi-function relay 1 item	35	BR Control:	-	-
	33	Multi-function relay 2 item*				

* G100C series models support Q1/EG open collector output terminal as a substitute for A2/C2 relay terminal 2.

When brake control is activated, DC braking (Ad.12) at inverter start and dwell operation (Ad.20–23) do not operate.

- **Brake release sequence:** During motor stop state, if an operation command is entered, the inverter accelerates up to brake release frequency (Ad.44– 45) in forward or in reverse direction. After reaching brake release frequency, if motor current reaches brake release current (BR Rls Curr), the output relay or multi-function output terminal for brake control sends a release signal. Once the signal has been sent, acceleration will begin after maintaining frequency for brake release delay time (BR Rls Dly).
- **Brake engage sequence:** If a stop command is sent during operation, the motor decelerates. Once the output frequency reaches brake engage frequency (BR Eng Fr), the motor stops deceleration and sends out a brake engage signal to a preset output terminal. Frequency is maintained for the brake engage delay time (BR Eng Dly) and will become 0 afterwards. If DC braking time (Ad.15) and DC braking resistance (Ad.16) are set, inverter output is blocked after DC braking. For DC braking, refer to **4.15.2 DC Braking After Stop** on page **114**.

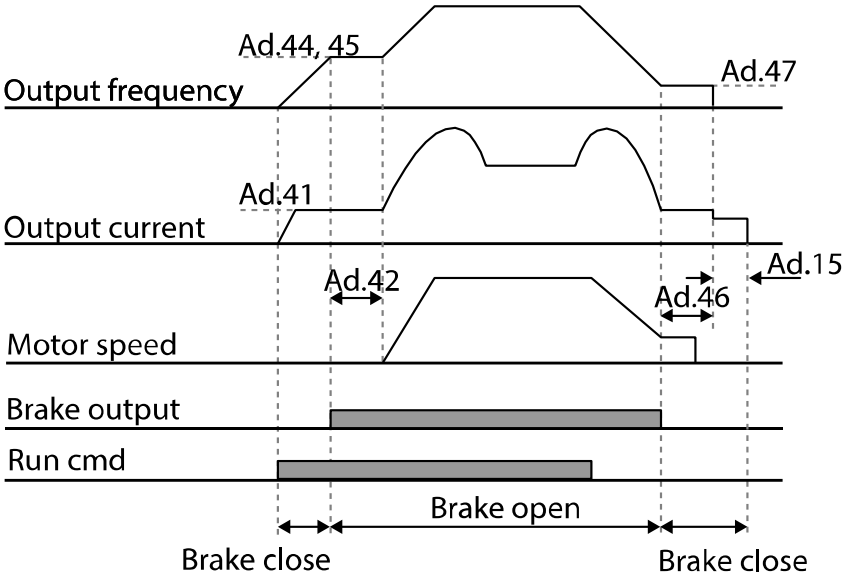

5.26 Multi-Function Relay On/Off Control

Set reference values (on/off level) for analog input and control output relay or multi-function output terminal on/off status accordingly.

Group	Code	Name	Setting		Setting Range	Unit
Ad	66	Output terminal on/off control mode	1	V1	-	-
	67	Output contact On level	90.00		Output contact off level–100.00%	%
	68	Output contact Off level	10.00		0.00–Output terminal on level	%
OU	31	Multi-function relay 1 item	34	On/Off	-	-
	33	Multi-function relay 2 item*				

* G100C series models support Q1/EG open collector output terminal as a substitute for A2/C2 relay terminal 2.

Multi-function Relay On/Off Control Setting Details

Code and Features	Description
Ad.66 On/Off Ctrl Src	Select analog input On/Off control.
Ad.67 On-C Level, Ad.68 Off-C Level	Set On/Off level at the output terminal.

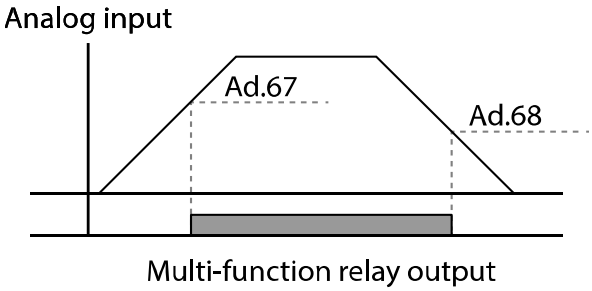

5.27 Press Regeneration Prevention

Press regeneration prevention is used during press operations to prevent braking during the regeneration process. If motor regeneration occurs during a press operation, motor operation speed automatically goes up to avoid the regeneration zone.

Group	Code	Name	Setting		Setting Range	Unit
Ad	74	Selection of regeneration evasion function for press	0	No	0–1	-
	75	Voltage level of regeneration evasion motion for press	350 V		200 V 300–400 V	V
			700 V		400 V 600–800 V	
	76	Compensation frequency limit of regeneration evasion for press	1.00 (Hz)		0.00–10.00 Hz	Hz
	77	Regeneration evasion for press P gain	50.0 (%)		0–100%	%
	78	Regeneration evasion for press I gain	500 (ms)		20–30000 ms	ms

Press Regeneration Prevention Setting Details

Code and Features	Description
Ad.74 RegenAvd Sel	Frequent regeneration voltage from a press load during constant speed motor operation may force excessive work on the brake unit which may damage or shorten the brake life. To prevent this situation, select Ad.74 (RegenAvd Sel) to control DC link voltage and disable the brake unit operation.
Ad.75 RegenAvd Level	Set brake operation prevention level voltage when the DC link voltage goes up due to regeneration.
Ad.76 CompFreq Limit	Set alternative frequency width that can replace actual operation frequency during regeneration prevention.
Ad.77 RegenAvd Pgain, Ad.78 RegenAvd Igain	To prevent regeneration zone, set P gain/I gain in the DC link voltage suppress PI controller.

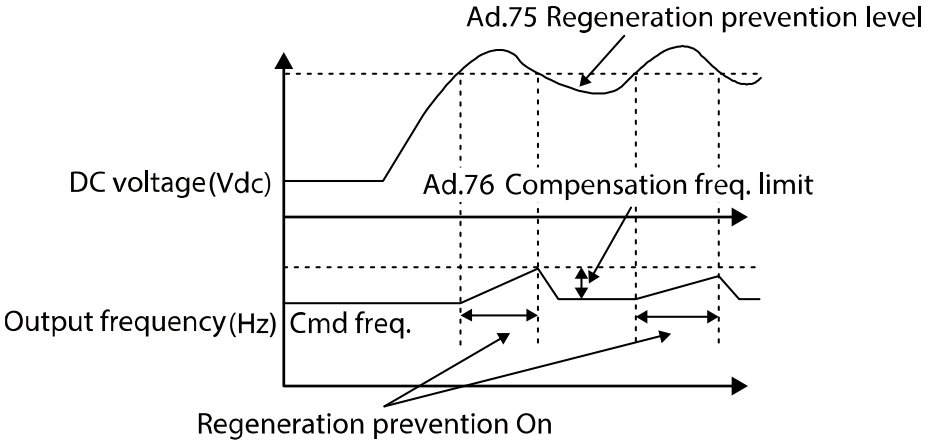

Note

Press regeneration prevention does not operate during accelerations or decelerations, but it only operates during constant speed motor operation. When regeneration prevention is activated, output frequency may change within the range set at Ad.76 (CompFreq Limit).

5.28 Analog Output

An analog output terminal(AO) provides output of 0–10 V voltage, and the IO terminal can output a 0-20mA.

5.28.1 Voltage Analog Output

An output option at AO1(Analog Output) terminal can be selected and an output size can be adjusted.

Group	Code	Name	Setting	Setting Range	Unit
OU	01	Analog output 1 item	0 Frequency	0–15	-
	02	Analog output 1 gain	100.0	-1000.0–1000.0	%
	03	Analog output 1 bias	0.0	-100.0–100.0	%
	04	Analog output 1 filter	5	0–10000	ms
	05	Analog constant output1	0.0	0.0–100.0	%
	06	Analog output1 monitor	0.0	0.0–1000.0	%

Voltage Analog Output Setting Details

<table>
<tr><th>Code and Features</th><th>Description</th></tr>
<tr><td>OU.01
AO1 Mode</td><td>Select a constant value for output.
<table>
<tr><th colspan="2">Configuration</th><th>Function</th></tr>
<tr><td>0</td><td>Frequency</td><td>Outputs operation frequency as a standard. 10 V output is made from the frequency set at dr.20 (Max Freq).</td></tr>
<tr><td>1</td><td>Output Current</td><td>10 V output is made from 200% of inverter rated current (heavy load).</td></tr>
<tr><td>2</td><td>Output Voltage</td><td>Sets the outputs based on the inverter output voltage. 10 V output is made from a set voltage in bA.15 (Rated V).
If 0 V is set in bA.15, 200 V/240 V/400 V models output 10 V based on the actual input voltage (480 V).</td></tr>
<tr><td>3</td><td>DC Link Volt</td><td>Outputs inverter DC link voltage as a standard. Outputs 10 V when the DC link voltage is 410 VDC for 200 V models, and 820 VDC for 400 V models.</td></tr>
<tr><td>4</td><td>Torque</td><td>Outputs the generated torque as a standard. Outputs 10 V at 250% of motor rated torque.</td></tr>
<tr><td>5</td><td>Output Power</td><td>Monitors output wattage. 200% of rated output is the maximum display voltage (10 V).</td></tr>
</table></td></tr>
</table>

Code and Features	Description		
	6	Idse	Outputs the maximum voltage at 200% of no load current. Outputs 0 V during V/F operation or slip compensation operation since it is an output of the magnitude of the current on the magnetic flux portion.
	7	Iqse	Outputs the maximum voltage at 250% of rated torque current. $\text{rated torque current} = \sqrt{\text{rated current}^2 - \text{no load current}^2}$
	8	Target Freq	Outputs set frequency as a standard. Outputs 10 V at the maximum frequency (dr.20).
	9	Ramp Freq	Outputs frequency calculated with Acc/Dec function as a standard. May vary with actual output frequency. Outputs 10 V.
	12	PID Ref Value	Outputs command value of a PID controller as a standard. Outputs approximately 6.6 V at 100%.
	13	PID Fdb Value	Outputs feedback volume of a PID controller as a standard. Outputs approximately 6.6 V at 100%.
	14	PID Output	Outputs output value of a PID controller as a standard. Outputs approximately 10 V at 100%.
	15	Constant	Outputs OU.05 (AO1 Const%) value as a standard.
	16	Mot Out Current	It outputs 10V at 100% of the motor rated current. The ratio can be adjusted in the OU.29 OutCurr at 10V parameter.
OU.02 AO1 Gain, OU.03 AO1 Bias	Adjusts output value and offset. If frequency is selected as an output item, it will operate as shown below. $$AO1 = \frac{Frequency}{MaxFreq} \times 10[V] \times AO1\ Gain + AO1\ Bias$$ The graph below illustrates the analog voltage output (AO1) changes depend on OU.02 (AO1 Gain) and OU.03 (AO1 Bias) values. Y-axis is analog output voltage (0–10 V), and X-axis is% value of the output item. Example, if the maximum frequency set at dr.20 (Max Freq) is 60 Hz and the present output frequency is 30 Hz, then the x-axis value on the next graph is 50%.		

Code and Features	Description
	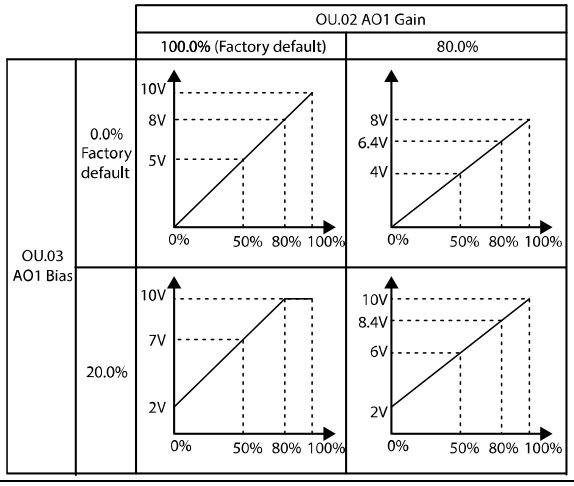
OU.04 AO1 Filter	Set filter time constant on analog output.
OU.05 AO1 Const%	If analog output at OU.01 (AO1 Mode) is set to 15 (Constant), the analog voltage output is dependent on the set parameter values (0–100%).
OU.06 AO1 Monitor	Monitors analog output value. Displays the maximum output voltage as a percentage (%) with 10 V as the standard.

5.28.2 Current Analog Output

An output option at IO(Current Output) terminal can be selected and an output size can be adjusted.

Group	Code	Name	Setting		Setting Range	Unit
OU	07	Analog output 2 item	0	Frequency	0–15	-
	08	Analog output 2 gain	100.0		-1000.0–1000.0	%
	09	Analog output 2 bias	0.0		-100.0–100.0	%
	10	Analog output 2 filter	5		0–10000	ms
	11	Analog constant output2	0.0		0.0–100.0	%
	12	Analog output2 monitor	0.0		0.0–1000.0	%

Current Analog Output Setting Details

Code and Features	Description
OU.07 AO2 Mode	Select a constant value for output.

Configuration		Function
0	Frequency	Outputs operation frequency as a standard. 20 mA output is made from the frequency set at dr.20 (Max Freq).
1	Output Current	20 mA output is made from 200% of inverter rated current (heavy load).
2	Output Voltage	Sets the outputs based on the inverter output voltage. 20 mA output is made from a set voltage in bA.15 (Rated V). If 0 V is set in bA.15, 200 V/240 V/400 V models output 20 mA based on the actual input voltage (480 V).
3	DC Link Volt	Outputs inverter DC link voltage as a standard. Outputs 20 mA when the DC link voltage is 240 VDC for 200 V models, and 480 VDC for 400 V models.
4	Torque	Outputs the generated torque as a standard. Outputs 20 mA at 250% of motor rated torque.
5	Output Power	Monitors output wattage. 200% of rated output is the maximum display current (20 mA).
6	Idse	Outputs the maximum voltage at 200% of no load current. Outputs 0 mA during V/F operation or slip compensation operation since it is an output of the magnitude of the current on the magnetic flux portion.

<table>
<tr><th>Code and Features</th><th colspan="3">Description</th></tr>
<tr><td rowspan="8"></td><td>7</td><td>Iqse</td><td>Outputs the maximum voltage at 250% of rated torque current.
$\text{rated torque current} = \sqrt{\text{rated current}^2 - \text{no load current}^2}$</td></tr>
<tr><td>8</td><td>Target Freq</td><td>Outputs set frequency as a standard. Outputs 20 mA at the maximum frequency (dr.20).</td></tr>
<tr><td>9</td><td>Ramp Freq</td><td>Outputs frequency calculated with Acc/Dec function as a standard. May vary with actual output frequency. Outputs 20 mA.</td></tr>
<tr><td>12</td><td>PID Ref Value</td><td>Outputs command value of a PID controller as a standard. Outputs approximately 13.2 mA at 100%.</td></tr>
<tr><td>13</td><td>PID Fdb Value</td><td>Outputs feedback volume of a PID controller as a standard. Outputs approximately 13.2 mA at 100%.</td></tr>
<tr><td>14</td><td>PID Output</td><td>Outputs output value of a PID controller as a standard. Outputs approximately 20 mA at 100%.</td></tr>
<tr><td>15</td><td>Constant</td><td>Outputs OU.05 (AO1 Const%) value as a standard.</td></tr>
<tr><td>16</td><td>Mot Out Current</td><td>It outputs 20 mA at 100% of the motor rated current. The ratio can be adjusted in the OU.29 OutCurr at 10V parameter.</td></tr>
<tr><td>OU.08 AO2 Gain, OU.09 AO2 Bias</td><td colspan="3">Adjusts output value and offset. If frequency is selected as an output item, it will operate as shown below.
$$AO2 = \frac{Frequency}{MaxFreq} \times 20[mA] \times AO2\ Gain + AO2\ Bias$$
The graph below illustrates the analog voltage output (AO2) changes depend on OU.08 (AO2 Gain) and OU.9 (AO2 Bias) values. Y-axis is analog output current (0–20 mA), and X-axis is% value of the output item.

Example, if the maximum frequency set at dr.20 (Max Freq) is 60 Hz and the present output frequency is 30 Hz, then the x-axis value on the next graph is 50%.</td></tr>
</table>

Code and Features	Description
	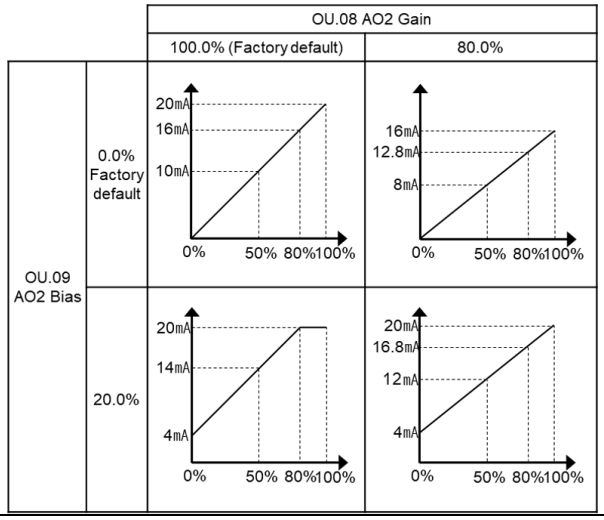
OU.10 AO2 Filter	Set filter time constant on analog output.
OU.11 AO2 Const%	If analog output at OU.07 (AO2 Mode) is set to 15 (Constant), the analog voltage output is dependent on the set parameter values (0–100%).
OU.12 AO2 Monitor	Monitors analog output value. Displays the maximum output voltage as a percentage (%) with 20 mA as the standard.

5.29 Digital Output

5.29.1 Multi-Function Relay Settings

Group	Code	Name	Setting		Setting Range	Unit
OU	30	Fault output item	010*		-	bit
	31	Multi-function relay 1 item	29	Trip	-	-
	33	Multi-function relay 2 item	14	Run	-	-
	41	Multi-function output monitor	-		00– 11	bit
	57	Detection frequency	30.00		0.00–Max Frequency	Hz
	58	Detection frequency band	10.00			
In	65–72	Px terminal setting options	16	Exchange	-	-

* Displayed as 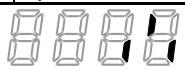 on the keypad.

Multi-Function Relay Setting Details

<table>
<tr><th>Code and Features</th><th>Description</th></tr>
<tr><td>OU.31 Relay1</td><td>Set the Relay 1 output item.</td></tr>
<tr><td>OU.33 Relay 2</td><td>Set the Relay 2 output item.
G100C series models support Q1/EG open collector output terminal as a substitute for A2/C2 relay terminal 2.</td></tr>
<tr><td>OU.41
DO Status</td><td>Set output terminal and relay functions according to OU.57 (FDT Frequency), OU.58 (FDT Band) settings and fault trip conditions.
<table>
<tr><th colspan="2">Configuration</th><th>Function</th></tr>
<tr><td>0</td><td>None</td><td>No output signal.</td></tr>
<tr><td>1</td><td>FDT-1</td><td>Detects inverter output frequency reaching the user set frequency. Outputs signal when the conditions below are satisfied.

Absolute value(set frequency–output frequency) < detected frequency width/2

When detected frequency width is 10 Hz, FDT-1 output is as shown in the graph below.
 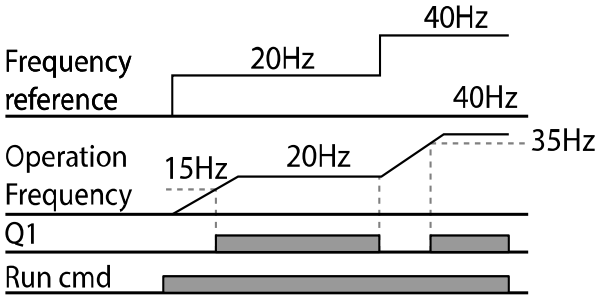
</td></tr>
<tr><td>2</td><td>FDT-2</td><td>Outputs a signal when the user set frequency and detected frequency (FDT Frequency) are equal, and fulfills FDT-1 condition at the same time.

[Absolute value (output frequency-detected frequency) < detected frequency width/2]&[FDT-1]

Detected frequency width is 10 Hz. When the detected frequency is set to 30 Hz, FDT-2 output is as shown in the graph below.</td></tr>
</table></td></tr>
</table>

Code and Features	Description		
			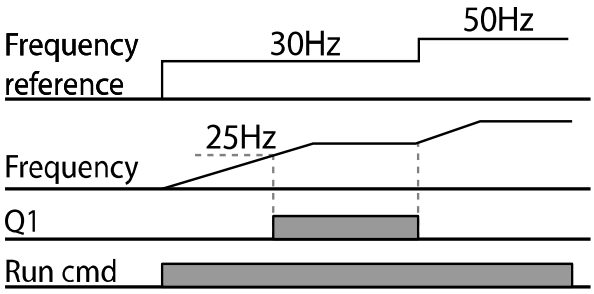
	3	FDT-3	Outputs signal when the operation frequency below meets the conditions. Absolute value(output frequency–operation frequency) < detected frequency width/2 Detected frequency width is 10 Hz. When the detected frequency is set to 30 Hz, FDT-3 output is as shown in the graph below. 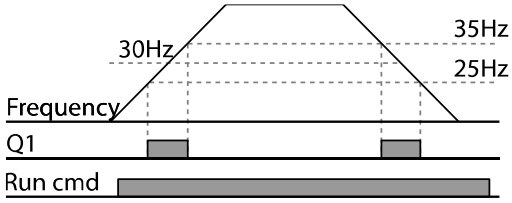
	4	FDT-4	Output signal can be separately set for acceleration and deceleration conditions. • **In acceleration:** Operation frequency ≧ Detected frequency • **In deceleration:** Operation frequency > (Detected frequency–Detected frequency width/2) Detected frequency width is 10 Hz. When the detected frequency is set to 30 Hz, FDT-4 output is as shown in the graph below. 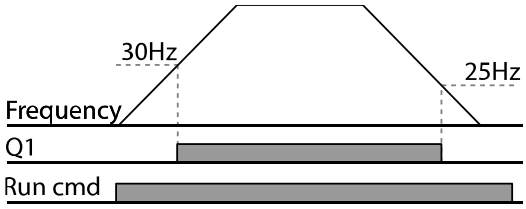
	5	Overload	Outputs a signal at motor overload.
	6	Inverter	Outputs a signal when a fault is triggered from a

Code and Features	Description		
		overload (IOL)	protective function operation by inverter overload inverse proportion.
	7	Underload	Outputs a signal at load fault warning.
	8	Fan Warning	Outputs a signal at fan fault warning.
	9	Stall	Outputs a signal when a motor is overloaded and stalled.
	10	Over Voltage	Outputs a signal when the inverter DC link voltage rises above the protective operation voltage.
	11	Low Voltage	Outputs a signal when the inverter DC link voltage drops below the low voltage protective level.
	12	Over Heat	Outputs signal when the inverter overheats.
	13	Lost Command	Outputs a signal when there is a loss of analog input terminal and RS-485 communication command at the terminal block. Outputs a signal when communication power and expansion an I/O power card is installed, and also outputs a signal when losing analog input and communication power commands.
	14	RUN	Outputs a signal when operation command is entered and the inverter outputs voltage. No signal output during DC braking. 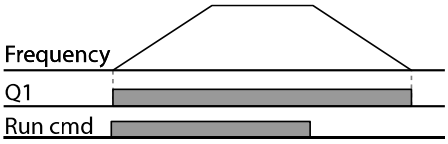
	15	Stop	Outputs a signal at operation command off, and when there is no inverter output voltage.
	16	Steady	Outputs a signal in steady operation.
	17	Inverter Line	Outputs a signal while the motor is driven by the inverter line.
	18	Comm Line	Outputs a signal if a multi-function input terminal (exchange) is input. For details, refer to **5.17 Commercial Power Source Transition** on page **179**.
	19	Speed Search	Outputs a signal during inverter speed search operation. For details, refer to **5.13 Speed Search Operation** on page **171**.
	21	Regeneration	Outputs signal if the motor is operating under regeneration mode.

Code and Features	Description		
			Braking resistance is activated when the inverter DC voltage is higher than the voltage set in Ad.79 and this feature operates only when the inverter is operating.
	22	Ready	Outputs signal when the inverter is in stand by operation and ready to receive an external operation command.
	23	FDT-5 (Zspd)	Outputs signal that is lower than the frequency set in OU.57 and OU.58.
	28	Timer Out	This is a feature to activate the contact output after a certain period of time using the multi-function terminal block. For details, refer to **5.24** Timer Settings on page **184**.
	29	Trip	Outputs a signal after a fault trip. Refer to **5.26 Multi-Function Relay On/Off Control** on page **187** for more details.
	31	DB Warn%ED	Refer to **6.2.5 Dynamic Braking (DB) Resistor Configuration** on page **222**.
	34	On/Off Control	Outputs a signal using an analog input value as a standard. Refer to **5.26 Multi-Function Relay On/Off Control** on page **187** for more details.
	35	BR Control	Outputs a brake release signal. Refer to **5.25 Brake Control** on page **185** for more details.
	38	Fire Mode	Outputs a signal when the inverter is operating in Fire Mode. Refer to **4.19 Fire Mode Operation** on page **121** for more details.
	40	KEB Operating	This outputs when the energy buffering operation is started because of low voltage of the inverter's DC power section due to a power failure on the input power. (This outputs in the energy buffering state before the input power restoration regardless of KEB-1 and KEB-2 mode settings.)
	42	Minor Fault	Outputs signal when inverter is under warning status.
	43	Prt Trq Det 1	Set torque detection protection action. Please refer to torque detection protection action function on page 205 for details.
	44	Prt Trq Det 2	Set torque detection protection action. Please refer to torque detection protection action function on page 205 for details.
	45	PID Sleep	Outputs signal when inverter is under PID Sleep status.

5.29.2 Trip Output to Multi-Function Relay

Using multi-function relays 1 and 2, you can output the trip status of inverter.

Group	Code	Name	Setting		Setting Range	Unit
OU	30	Fault output item	010		-	bit
	31	Multi-function relay 1 item	29	Trip	-	-
	33	Multi-function relay 2 item*	14	Run	-	-
	53	Fault output On delay	0.00		0.00–100.00	sec
	54	Fault output Off delay	0.00		0.00–100.00	Sec

*G100C series models support Q1/EG open collector output terminal as a substitute for A2/C2 relay terminal 2.

Trip Setting Details to Multi-Function Relay

<table>
<tr><th>Code and Features</th><th>Description</th></tr>
<tr><td>OU.30 Trip Out Mode</td><td>Fault trip relay operates based on the fault trip output settings.
<table>
<tr><th>Items</th><th>Bit On Status</th><th>Bit Off Status</th></tr>
<tr><td>Keypad</td><td> </td><td> </td></tr>
</table>
After selecting the multi-function relay to use as the trip output, select 29 (Trip Mode) in OU.31, 33. If the trip occurs from the inverter, the applicable multi-function relay will be activated. Activation status of multi-function relay can be set up as below depending on the trip type.
<table>
<tr><th colspan="3">Configuration</th><th rowspan="2">Function</th></tr>
<tr><th>bit3</th><th>bit2</th><th>bit1</th></tr>
<tr><td></td><td></td><td>✓</td><td>Operates when low voltage fault trips occur</td></tr>
<tr><td></td><td>✓</td><td></td><td>Operates when fault trips other than low voltage occur</td></tr>
<tr><td>✓</td><td></td><td></td><td>Operates when auto restart fails (Pr. 08–09)</td></tr>
</table></td></tr>
<tr><td>OU.31 Relay1</td><td>Set the Relay 1 output item.</td></tr>
<tr><td>OU.33 Relay 2</td><td>Set the Relay 2 output item.</td></tr>
<tr><td>OU.53 TripOut On Dly,
OU.54 TripOut Off Dly</td><td>If a trip occurs, multi-function relay 1 or multi-function relay 2 will be activated after the time set in multi-function. Terminal is off with the input initialized after the time delay set in OU.54.</td></tr>
</table>

5.29.3 Multi-Function Relay Terminal Delay Time Settings

Set On delay time and Off delay time specifically to adjust the multi-function relay operation time of the terminal. The delay time set in OU.50–51 will be applied to both Relay 1 and Relay 2 except for when the multi-function relay feature is under trip mode.

Group	Code	Name	Setting	Setting Range	Unit
OU	50	Multi-function output On delay	0.00	0.00–100.00	sec
	51	Multi-function output Off delay	0.00	0.00–100.00	sec
	52	Multi-function output contact selection	00*	00–11	bit

*Displayed as 0001 on the Keypad.

Output Terminal Delay Time Setting Details

Code and Features	Description
OU.52 DO NC/NO Sel	Select the contact type of relay 1 and relay 2. By setting the relevant bit to 0, it will operate A terminal (Normally Open), and setting it to 1 will operate B terminal (Normally Closed). Shown below in the table are Relay 1 and Relay 2 settings starting from the right bit.

Items	Bit On Status	Bit Off Status
Keypad	0001	0000

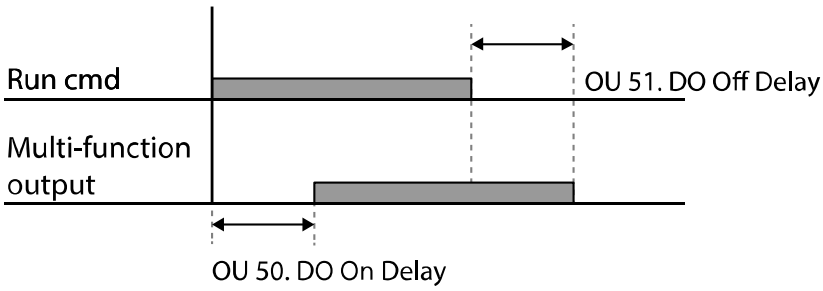

5.30 Base Block

This feature is used when output is blocked while operating the inverter or when the multi-function relay must maintain the operating status by blocking output while stopping. If the multi-function signal set as base block is entered during operation, the motor will run freely. If the base block signal is disabled, speed search operation will start with the value set in Cn.72–75 even if the Cn.71 speed search operation selection parameter is not activated. The output being blocked by the base block feature does not have effect on the multi-function relay and will be recognized as being in operation even if there is no inverter output.

Group	Code	Name	Setting		Setting Range	Unit
In	65–72	Px terminal setting options	33	Base Block	1–52	-
OU	31	Multi-function relay 1 item	14	Run	1–44	-
	33	Multi-function relay 2 item			-	-

Base Block Operation Setting Details

Code and Features	Description
In.65–72 Px define	Select the multi-function input terminal to receive the base block signal and set the applicable terminal to 33 (Base Block).
OU.31 Relay 1 OU.33 Relay 2	Set the multi-function relay terminal to 14 (Run). If the operation command is given, the inverter will accelerate up to the command frequency. If the base block signal is entered during acceleration or constant speed operation, the inverter will block the output immediately and start free-run. If the base block signal is disabled, the inverter will accelerate as a speed search operation until it reaches the command frequency, without receiving a specific reset command. "bb" will be displayed on the keypad during the base block operation. Disabling the base block will reset the inverter automatically and the base block will not be recorded in the trip history.

5.31 Overvoltage trip(OVT) suppression

This function prevents the DC link voltage from rising due to the regenerative energy generated when the deceleration is stopped, thereby preventing the DC link voltage from occurring. If the Cn.96 parameter is set to 0:No, the output voltage is maintained according to the frequency even if the voltage of the DC link of the inverter rises due to the regenerative energy generated when the deceleration is stopped. In this case, the regenerative energy cannot be consumed, which can result in a DC link overvoltage trip. If the Cn.96 parameter is set to 1:Yes, if the DC link voltage rises due to deceleration, the DC link voltage rise is allowed to the output voltage without adjusting the output voltage, which consumes regenerative energy. This can suppress the occurrence of DC link overvoltage trip. If the DC link overvoltage trip generation suppression function is used, the output current may increase when the deceleration is stopped.

Group	Code	Name	Setting		Setting Range	Unit
Cn	96	Suppressing OVT occurrences	0	No	0-1	-
			1	Yes		

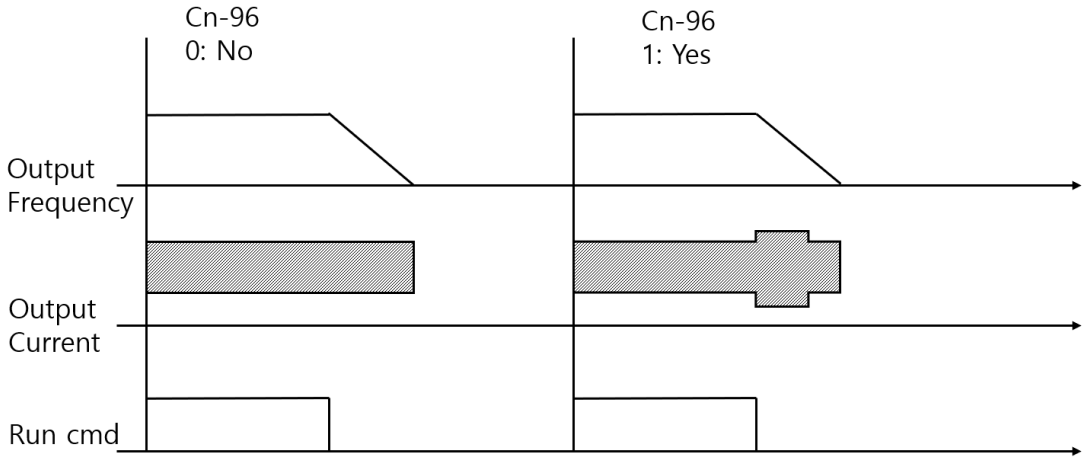

5.32 Setting the output overcurrent suppression method

When the output current exceeds the overcurrent suppression threshold, the inverter suppresses the output current by forcing the output frequency to be lowered. This behavior depends on the setting of the Cn.97 output overcurrent suppression method parameter. If the Cn.97 parameter is set to 0: Standard, the overcurrent suppression controller operates from the occurrence of the overcurrent until the target frequency is reached. In this case, the acceleration time is longer but can be reliably accelerated. If the Cn.97 parameter is set to 1: Aggressive, the overcurrent suppression controller operates after the overcurrent occurs, but if the output current is reduced below a certain reference value, it will accelerate normally according to the set acceleration time. In this case, the acceleration time may be reduced compared to the 0: Standard setting, but overcurrent suppression may occur frequently until the target frequency is reached.

Group	Code	Name	Setting		Setting Range	Unit
Cn	97	Output overcurrent suppression method	0	Standard	0-1	-
			1	Aggressive		

5.33 Prevention of output current hunting

If the inverter is driving at high speed, the output current hunting can occur due to load conditions. If the hunting of the output current is confirmed during high speed operation, the Cn.20 parameter can be set to 1:Yes to prevent shaking of the output current hunting and current monitoring values.

Group	Code	Name	Setting		Setting Range	Unit
Cn	20	ACO Enable (Anti Current Oscillation Enable)	0	No	0-1	-
			1	Yes		

6 Learning Protection Features

Protection features provided by the G100 series inverter are categorized into two types: protection from overheating damage to the motor, and protection against the inverter malfunction.

6.1 Motor Protection

6.1.1 Electronic Thermal Motor Overheating Prevention (ETH)

ETH is a protective function that uses the output current of the inverter without a separate temperature sensor, to predict a rise in motor temperature to protect the motor based on its heat characteristics.

Group	Code	Name	Setting		Setting Range	Unit
Pr	40	Electronic thermal prevention fault trip selection	0	None	0–2	-
	41	Motor cooling fan type	0	Self-cool	-	-
	42	Electronic thermal 1 minute rating	150		120–200	%
	43	Electronic thermal continuous rating	120		50–150	%

Electronic Thermal (ETH) Prevention Function Setting Details

Code and Features	Description
Pr.40 ETH Trip Sel	ETH can be selected to provide motor thermal protection.

Configuration		Function
0	None	The ETH function is not activated.
1	Free-Run	The inverter output is blocked. The motor coasts to a halt (free-run).
2	Dec	The inverter decelerates the motor to a stop.

<table>
<tr><th>Code and Features</th><th>Description</th></tr>
<tr><td>Pr.41 Motor Cooling</td><td>Select the drive mode of the cooling fan, attached to the motor.
<table>
<tr><th colspan="2">Configuration</th><th>Function</th></tr>
<tr><td>0</td><td>Self-cool</td><td>As the cooling fan is connected to the motor axis, the cooling effect varies, based on motor speed. Most universal induction motors have this design.</td></tr>
<tr><td>1</td><td>Forced-cool</td><td>Additional power is supplied to operate the cooling fan. This provides extended operation at low speeds. Motors designed for inverters typically have this design.</td></tr>
</table>
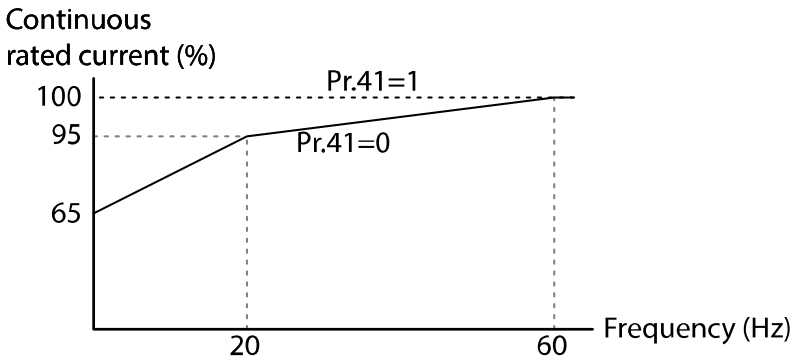
</td></tr>
<tr><td>Pr.42 ETH 1min</td><td>The amount of input current that can be continuously supplied to the motor for 1 minute, based on the motor-rated current (bA.13).</td></tr>
<tr><td>Pr.43 ETH Cont</td><td>Sets the amount of current with the ETH function activated. The range below details the set values that can be used during continuous operation without the protection function.
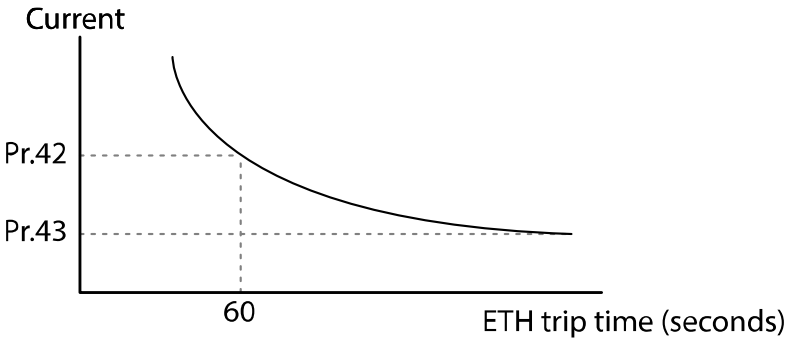
</td></tr>
</table>

6.1.2 Motor Temperature Sensing

The motor temperature sensor (PT1000, PTC) attached to the motor is connected to the analog input I2 terminal of the inverter terminal block to sense the motor temperature and activate the protection function in case of motor overheating. (SW3 of STO IO must be set to left PTC to enable this function.)

Group	Code	Name	Setting		Setting Range	Unit
Pr	34	PTC Fault Mode	0	None	0~3	-
	35	Temperature sensor type	0	PTC	0~1	-
	36	Number of temperature sensor connections	0	3-Serial	0~1	-
	37*	Fault temperature setting	-10~180		-	℃
	38*	Temperature warning release level	-10~180		-	℃
	39*	Temperature monitoring	-10~180		-	℃

*Pr.37 – Pr.39 are visible only when Pr.35 is set to 1(PT1000)

Detailed settings for motor temperature sensing input

<table>
<tr><th>Code and features</th><th>Description</th></tr>
<tr><td>Pr.34
PTC Trip Sel</td><td>Select the inverter operation state when a PTC Trip occurs.
<table>
<tr><th colspan="2">Configuration</th><th>Function</th></tr>
<tr><td>0</td><td>None</td><td>Disable the PTC Trip feature.</td></tr>
<tr><td>1</td><td>Warning</td><td>Display the warning and continue the driving.</td></tr>
<tr><td>2</td><td>Free-Run</td><td>Shut off the inverter output to allow the motor to free-run</td></tr>
<tr><td>3</td><td>Dec</td><td>Decelerate and stop the motor.</td></tr>
</table></td></tr>
<tr><td>Pr.35
PTC Sensor Sel</td><td>Select the type of motor temperature sensor,
<table>
<tr><th colspan="2">Configuration</th><th>Function</th></tr>
<tr><td>0</td><td>PTC</td><td>When using a PTC as a motor temperature sensor, it maintains a resistance of less than 550Ω at temperatures below the desired protection temperature -5K. At the protection temperature -5K, it exhibits a resistance value of 550Ω, and it sharply increases to 1330Ω at the protection temperature +5K, thus protecting the motor from overheating.</td></tr>
</table></td></tr>
</table>

Code and features	Description		
			Since the resistor value does not change linearly, monitoring is not possible. Considering the impact of noise, it is designed to trigger a trip a protection temperature level of +5K. Please refer to the following PTC characteristic graph. 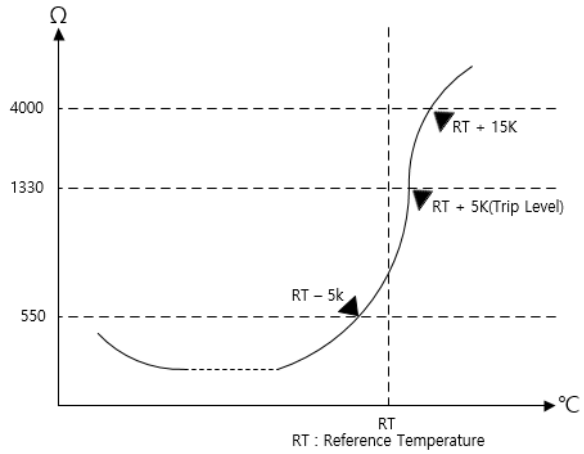
	1	PT1000*	When using a PT1000 as a motor temperature sensor, it has a resistance value of 1000Ω at 0℃, and the resistance value increases nearly linearly as the temperature increases. Since the resistance value changes almost linearly, monitoring is possible and the desired protection temperature can be set. The adjustable protection temperature range is -10 to 180℃. Please refer to the following PT1000 characteristic graph. 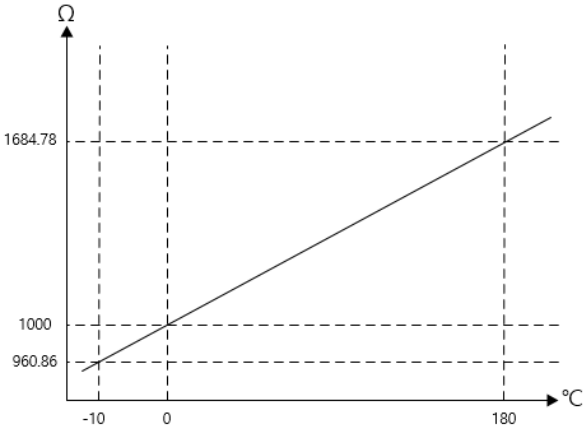

<table>
<tr><th>Code and features</th><th>Description</th></tr>
<tr><td>Pr.36
PTC Sensor Number Sel</td><td>Select the number of serial connections for the motor temperature sensor.
<table>
<tr><th colspan="2">Configuration</th><th>Function</th></tr>
<tr><td>0</td><td>3</td><td>When using three motor temperature sensors in series.</td></tr>
<tr><td>1</td><td>1</td><td>When using one motor temperature sensor in series.</td></tr>
</table></td></tr>
<tr><td>Pr.37
PTC Trip Temp. Sel</td><td>Set the desired motor overheat trip temperature.
Adjustable range : -10~180℃</td></tr>
<tr><td>Pr.38
PTC Warning Clear Sel</td><td>Set the desired release temperature for motor overheat warning.
Adjustable range: -10~180℃</td></tr>
<tr><td>Pr.39
PTC Temp. Monitoring</td><td>Monitor the motor temperature.</td></tr>
</table>

*Pr.37-39 are only visible when Pr.35 is set to 1 (PT1000).

How to wire the motor temperature sensor

To enable the motor temperature sensing function, set SW3 to the left PTC and connect the PTC or PT1000 between IO terminal I2 and CM as shown in the diagram. The motor temperature sensing function does not work when SW3 is set to the right I2.

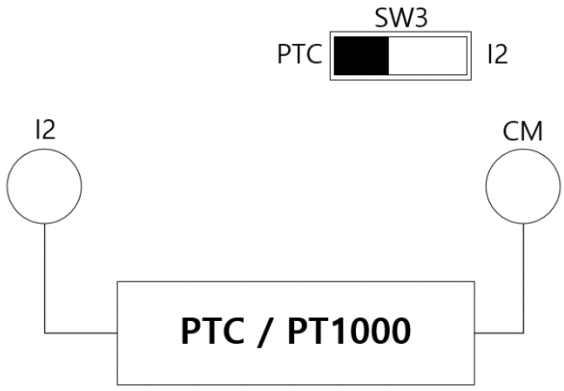

6.1.3 Overload Early Warning and Trip

A warning or fault 'trip' (cutoff) occurs when the motor reaches an overload state, based on the motor's rated current. The amount of current for warnings and trips can be set separately.

Group	Code	Name	Setting		Setting Range	Unit
Pr	04	Load level setting	1	Heavy Duty	-	-
	17	Overload warning selection	1	Yes	0–1	-
	18	Overload warning level	150		30–180	%
	19	Overload warning time	10.0		0–30	sec
	20	Motion at overload fault	1	Free-Run	-	-
	21	Overload fault level	180		30–200	%
	22	Overload fault time	60.0		0–60.0	sec
OU	31	Multi-function relay 1 item	5	OverLoad	-	-
	33	Multi-function relay 2 item				

Overload Early Warning and Trip Setting Details

Code and Features	Description
Pr.04 Load Duty	Select the load level. Configuration / Function: 0 – Normal Duty: Used in underloads, like fans and pumps (overload tolerance: 120% of rated underload current for 1 minute). 1 – Heavy Duty: Used in heavy loads, like hoists, cranes, and parking devices (overload tolerance: 150% of rated heavy load current for 1 minute). 22 kW 200 V models can be set to only 1:Heavy Duty.
Pr.17 OL Warn Select	If the overload reaches the warning level, the terminal block multi-function output terminal and relay are used to output a warning signal. If 1 (Yes) is selected, it will operate. If 0 (No) is selected, it will not operate.
Pr.18 OL Warn Level, Pr.19 OL Warn Time	When the input current to the motor is greater than the overload warning level (OL Warn Level) and continues at that level during the overload warning time (OL Warn Time), the multi-function output (Relay 1, Relay 2) sends a warning signal. Multi-function relay terminal and relay outputs signal if OU.31 and OU.33 codes are set to 5 (Overload). The signal output does not block the inverter output.

<table>
<tr><th>Code and Features</th><th>Description</th></tr>
<tr><td>Pr.20
OL Trip Select</td><td>Select the inverter protective action in the event of an overload fault trip.
<table>
<tr><th colspan="2">Configuration</th><th>Function</th></tr>
<tr><td>0</td><td>None</td><td>No protective action is taken.</td></tr>
<tr><td>1</td><td>Free-Run</td><td>In the event of an overload fault, inverter output is blocked and the motor will free-run due to inertia.</td></tr>
<tr><td>3</td><td>Dec</td><td>If a fault trip occurs, the motor decelerates and stops.</td></tr>
</table></td></tr>
<tr><td>Pr.21
OL Trip Level,
Pr.22
OL Trip Time</td><td>When the current supplied to the motor is greater than the preset value at the overload trip level (OL Trip Level) and continues to be supplied during the overload trip time (OL Trip Time), the inverter output is either blocked according to the preset mode from Pr. 17 or slows to a stop after deceleration.</td></tr>
</table>

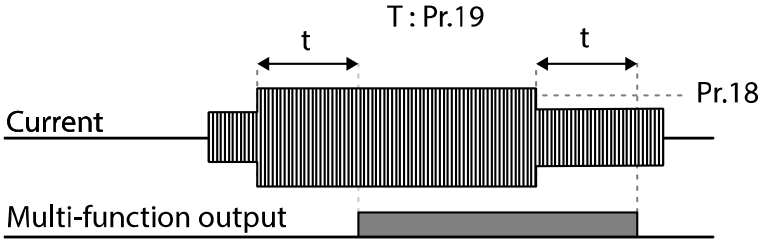

Note

Overload warnings warn of an overload before an overload fault trip occurs. The overload warning signal may not work in an overload fault trip situation, if the overload warn level (OL Warn Level) and the overload warn time (OL Warn Time) are set higher than the overload trip level (OL Trip Level) and overload trip time (OL Trip Time).

6.1.4 Stall Prevention and Flux Braking

The stall prevention function is a protective function that prevents motor stall caused by overloads. If a motor stall occurs due to an overload, the inverter operation frequency is adjusted automatically. When stall is caused by overload, high currents are induced in the motor may cause motor overheat or damage the motor and interrupt operation of the motor-driven devices.

Flux braking is used to gain the optimum deceleration time without the braking resistance. If the deceleration time is too short, over voltage trip may occur due to the regeneration energy from the motor. When using flux braking, ideal deceleration time may be gained without over voltage trip because regenerative energy is expended at the motor. Flux braking stops operating when the control mode is IM Sensorless.

Group	Code	Name	Setting	Setting Range	Unit
Pr	50	Stall prevention motion and flux braking	0000*	-	bit
	51	Stall frequency 1	60.00	Start frequency–Stall Freq 1	Hz
	52	Stall level 1	180	30–250	%
	53	Stall frequency 2	60.00	Stall Freq 1–Stall Freq 3	Hz
	54	Stall level 2	180	30–250	%
	55	Stall frequency 3	60.00	Stall Freq 2–Stall Freq 4	Hz
	56	Stall level 3	180	30–250	%
	57	Stall frequency 4	60.00	Stall Freq 3–Maximum frequency	Hz
	58	Stall level 4	180	30–250	%
OU	31	Multi-function relay 1 item	9 Stall	-	-
	33	Multi-function relay 2 item			

* Displayed as 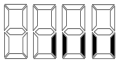 on the Keypad.

Stall Prevention Function and Flux Braking Setting Details

<table>
<tr><th>Code and Features</th><th>Description</th></tr>
<tr><td>Pr.50
Stall Prevent</td><td>
Stall prevention can be configured for acceleration, deceleration, or while operating a motor at constant speed. When the top LCD segment is on, the corresponding bit is set. When the bottom LCD segment is on, the corresponding bit is off.

<table>
<tr><th>Items</th><th>Bit On Status</th><th>Bit Off Status</th></tr>
<tr><td>Keypad</td><td> </td><td> </td></tr>
</table>

<table>
<tr><th colspan="5">Configuration</th><th rowspan="2">Function</th></tr>
<tr><th>bit5</th><th>bit4</th><th>bit3</th><th>bit2</th><th>bit1</th></tr>
<tr><td></td><td></td><td></td><td></td><td>✓</td><td>Stall protection during acceleration</td></tr>
<tr><td></td><td></td><td></td><td>✓</td><td></td><td>Stall protection while operating at a constant speed</td></tr>
<tr><td></td><td></td><td>✓</td><td></td><td></td><td>Stall protection during deceleration</td></tr>
<tr><td></td><td>✓</td><td></td><td></td><td></td><td>Flux braking during deceleration</td></tr>
<tr><td>✓</td><td></td><td></td><td></td><td></td><td>Stall protection mode 2</td></tr>
</table>

<table>
<tr><th colspan="2">Configuration</th><th>Function</th></tr>
<tr><td>0 0001</td><td>Stall protection during acceleration (Mode1)</td><td>During acceleration, if the inverter output current is greater than the set stall levels (Pr.52, 54, 56, 58), stop acceleration and decelerate. If the current continues to be above the stall level, it decelerates to the start frequency (dr.19 Start Freq). During stall protection operation, if the current decelerates to below the set level, it accelerates again.</td></tr>
</table>
</td></tr>
</table>

Code and Features	Description		
	1 0001	Stall protection during acceleration (Mode2)	During acceleration, if the inverter output current is greater than the set stall levels (Pr. 52, 54, 56, 58), adjust the output frequency. If the output current is greater than or equal to the stall level, PI control is performed according to the amount of current to adjust the output frequency. During stall protection operation, accelerate again when the current decelerates to below the release level.
	0 0010	Stall protection while operating at constant speed (Mode1)	Similar to the anti-stall function during acceleration (Mode1), when current flows above the set stall level during constant-speed operation, the output frequency is automatically reduced and decelerated. When the load current is reduced and below the release level, it accelerates again.
	1 0010	Stall protection while operating at constant speed (Mode2)	As with Stall Protection during acceleration (Mode2), if current flows above the set stall level during constant-speed operation, the output frequency is adjusted according to the magnitude of the load current. If the load current decreases and falls below the release level, it accelerates again..
	# 0100	Stall protection during deceleration	During deceleration, keep the voltage on the DC link below a certain level and decelerate to prevent overvoltage tripping; depending on the load, the deceleration time may be longer than the set time.
	# 1000	Flux braking during deceleration	Flux braking controls regenerative energy to be consumed by the motor, reducing deceleration time
	# 1100	Stall protection and flux braking during deceleration	Stall protection and flux braking work together during deceleration for shortest/optimal deceleration performance.

* #indicates both 0/1 selection settings

Code and Features	Description
	Stall protection during acceleration or Constant speed operation (Mode1) 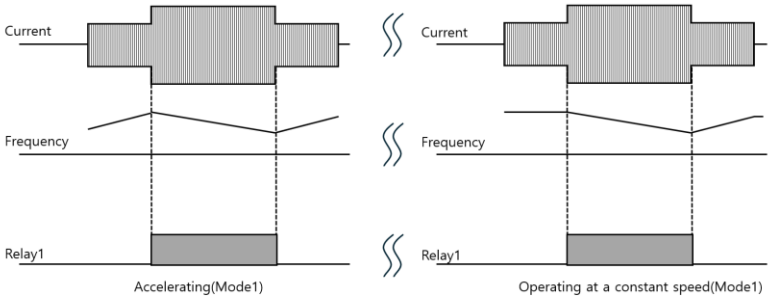 Mode 1 : Decrease to the start frequency according to the stall level Stall protection during acceleration or Constant speed operation (Mode2) 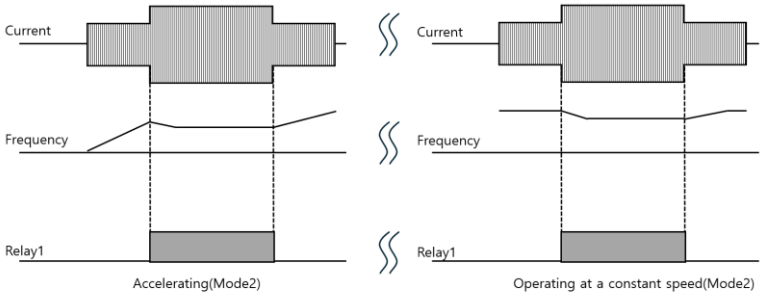 Mode 2 : Frequency adjustment according to the stall level and load current amount 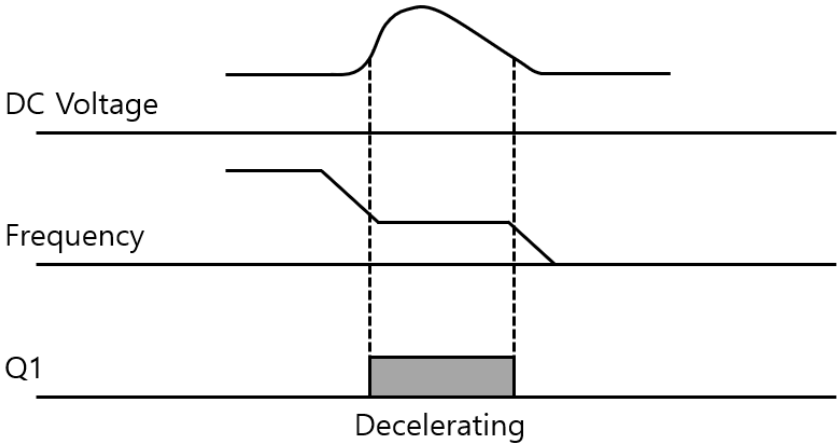

Code and Features	Description
Pr.51 Stall Freq 1 – Pr.58 Stall Level4	Additional stall protection levels can be configured for different frequencies, based on the load type. As shown in the graph below, the stall level can be set above the base frequency. The lower and upper limits are set using numbers that correspond in ascending order. For example, the range for Stall Frequency 2 (Stall Freq 2) becomes the lower limit for Stall Frequency 1 (Stall Freq 1) and the upper limit for Stall Frequency 3 (Stall Freq 3). 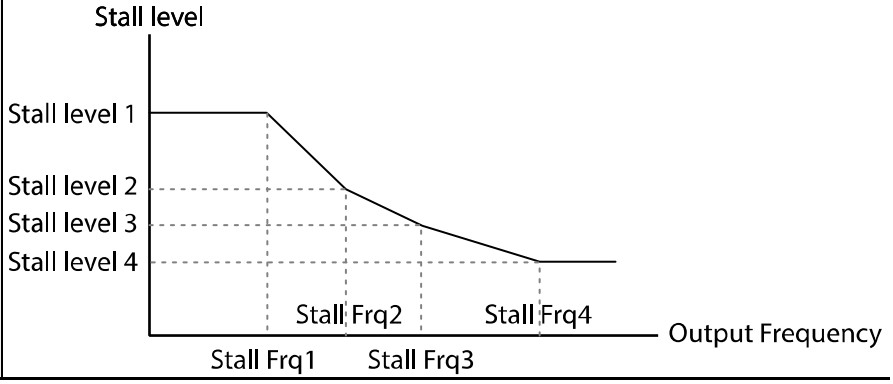

Note

Stall protection and flux braking operate together only during deceleration. Turn on the third and fourth bits of Pr.50 (Stall Prevention) to achieve the shortest and most stable deceleration performance without triggering an overvoltage fault trip for loads with high inertia and short deceleration times. Do not use this function when frequent deceleration of the load is required, as the motor can overheat and may be damaged easily.
When operating Braking resistor, the motor may vibrate under the Flux braking operation. In this case, please turn off the Flux braking (Pr.50).

Caution

- Use caution when decelerating while using stall protection as depending on the load, the deceleration time can take longer than the time set. Acceleration stops when stall protection operates during acceleration.
- When the motor is operating, Stall Level 1 applies and determines the operation of stall protection.

6.2 Inverter and Sequence Protection

6.2.1 Input/output Open-phase Protection

Open-phase protection is used to prevent overcurrent levels induced at the inverter inputs due to an open-phase within the input power supply. Open-phase output protection is also available. An open-phase at the connection between the motor and the inverter output may cause the motor to stall, due to a lack of torque.

Group	Code	Name	Setting	Setting Range	Unit
Pr	05	Input/output open-phase protection	00*	-	bit
	06	Input voltage range during open-phase	15	1–100 V	V

*Displayed as 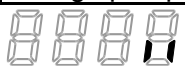 on the Keypad.

Input and Output Open-phase Protection Setting Details

<table>
<tr><th>Code and Features</th><th>Description</th></tr>
<tr><td>Pr.05 Phase Loss Chk,
Pr.06 IPO V Band</td><td>
Input and output phase protection can each be selected. When the dot is displayed above the switch, the corresponding bit is set to on. When it is below the switch, it is set to on.
<table>
<tr><th>Items</th><th>Bit On Status</th><th>Bit Off Status</th></tr>
<tr><td>Keypad</td><td> </td><td> </td></tr>
</table>
<table>
<tr><th colspan="2">Configuration</th><th rowspan="2">Function</th></tr>
<tr><th>bit2</th><th>bit1</th></tr>
<tr><td></td><td>✓</td><td>Output open-phase protection</td></tr>
<tr><td>✓</td><td></td><td>Input open-phase protection</td></tr>
</table>
Initial values by each product on input voltage range during open-phase are shown as below.
<table>
<tr><th>Items</th><th>Initial Value</th><th>Unit</th></tr>
<tr><td>0.4 kW–2.2 kW (200 V/400 V)</td><td>15</td><td>V</td></tr>
<tr><td>4.0 kW–7.5 kW (200 V/400 V)</td><td>13</td><td>V</td></tr>
<tr><td>11kW~22kW(200V/400V)</td><td>15</td><td>V</td></tr>
</table>
</td></tr>
</table>

6.2.2 External Trip Signal

Set one of the multi-function input terminals to 4 (External Trip) to allow the inverter to stop operation by using external signals.

Group	Code	Name	Setting		Setting Range	Unit
In	65–72	Px terminal setting options	4	External Trip	-	-
	87	Multi-function input terminal selection	0000		-	bit

External Trip Signal Setting Details

Code and Features	Description
In.87 DI NC/NO Sel	Select the type of input contact. If the mark of the switch is at the bottom (0), it operates as an A contact (Normally Open). If the mark is at the top (1), it operates as a B contact (Normally Closed). The corresponding terminals for each bit are as follows:

Bit	8	7	6	5	4	3	2	1
Terminals	P8	P7	P6	P5	P4	P3	P2	P1

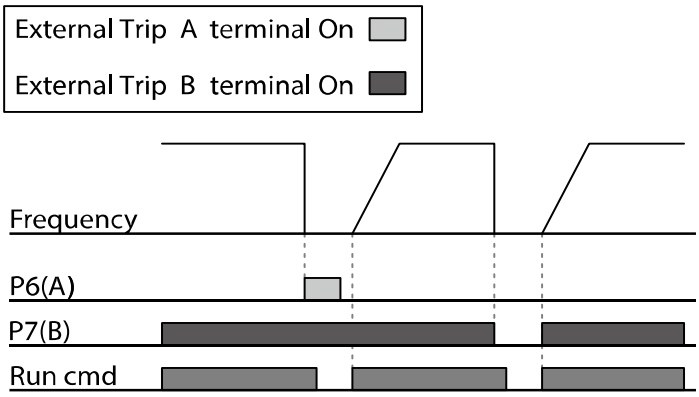

6.2.3 Inverter Overload Protection

When the inverter input current exceeds the rated current, a protective function is activated to prevent damages to the inverter based on inverse proportional characteristics.

Group	Code	Name	Setting		Setting Range	Unit
OU	31	Multi-function relay 1 item	6	IOL	-	-
	33	Multi-function relay 2 item				

Note

A warning signal output can be provided in advance by the multi-function output terminal before the inverter overload protection function (IOL) operates. When the overcurrent time reaches 60 of the allowed overcurrent (150%, 1 min), a warning signal output is provided (signal output at 150%, 36 sec).

6.2.4 Speed Command Loss

When setting operation speed using an analog input at the terminal block, communication options, or the keypad, speed command loss setting can be used to select the inverter operation for situations when the speed command is lost due to the disconnection of signal cables.

Group	Code	Name	Setting		Setting Range	Unit
Pr	12	Motion at speed command loss	1	Free-Run	-	-
	13	Time to determine speed command loss	1.0		0.0–120.0	sec
	14	Operation frequency at speed command loss	0.00		Start frequency–Max. frequency	Hz
	15	Analog input loss decision level	0	Half of x1		-
OU	31	Multi-function relay 1 item	13	Lost Command	-	-
	33	Multi-function relay 2 item				

Speed Command Loss Setting Details

<table>
<tr><th>Code and Features</th><th>Description</th></tr>
<tr><td>Pr.12 Lost Cmd Mode</td><td>In situations when speed commands are lost, the inverter can be configured to operate in a specific mode.
<table>
<tr><th colspan="2">Configuration</th><th>Function</th></tr>
<tr><td>0</td><td>None</td><td>The speed command immediately becomes the operation frequency without any protection function.</td></tr>
<tr><td>1</td><td>Free-Run</td><td>The inverter blocks output. The motor performs in free-run condition.</td></tr>
<tr><td>2</td><td>Dec</td><td>The motor decelerates and then stops at the time set at Pr.07 (Trip Dec Time).</td></tr>
<tr><td>3</td><td>Hold Input</td><td>The inverter calculates the average input value for 10 seconds before the loss of the speed command and uses it as the speed reference.</td></tr>
<tr><td>4</td><td>Hold Output</td><td>The inverter calculates the average output value for 10 seconds before the loss of the speed command and uses it as the speed reference.</td></tr>
<tr><td>5</td><td>Lost Preset</td><td>The inverter operates at the frequency set at Pr. 14 (Lost Preset F).</td></tr>
</table></td></tr>
<tr><td>Pr.15 AI Lost Level, Pr.13 Lst Cmd Time</td><td>Configure the voltage and decision time for speed command loss when using analog input.
<table>
<tr><th colspan="2">Configuration</th><th>Function</th></tr>
<tr><td>0</td><td>Half of x1</td><td>Based on the values set at In.08 and In.12, protective operation starts when the input signal is reduced to half of the initial value of the analog input set using the speed command (Frq code of Operation group) and it continues for the time (speed loss decision time) set at Pr. 13 (Lost Cmd Time). For example, set the speed command to 2 (V1) at the Frq code in the Operation group, and In.06 (V1 Polarity) to 0 (Unipolar). When the voltage input drops to less than half of the value set at In.08 (V1 Volt x 1), the protective function is activated.</td></tr>
<tr><td>1</td><td>Below of x1</td><td>The protective operation starts when the signal becomes smaller than the initial value of the analog input set by the speed command and it continues for the speed loss decision time set at Pr.13 (Lost Cmd Time). Codes In.08 and In.12 are used to set the standard values.</td></tr>
</table></td></tr>
</table>

Code and Features	Description
Pr.14 Lost Preset F	In situations where speed commands are lost, set the operation mode (Pr.12 Lost Cmd Mode) to 5 (Lost Preset). This operates the protection function and sets the frequency so that the operation can continue.

Set Pr.15 (AI Lost Level) to 1 (Below x 1), Pr.12 (Lost Cmd Mode) to 2 (Dec), and Pr.13 (Lost Cmd Time) to 5 sec. Then it operates as follows:

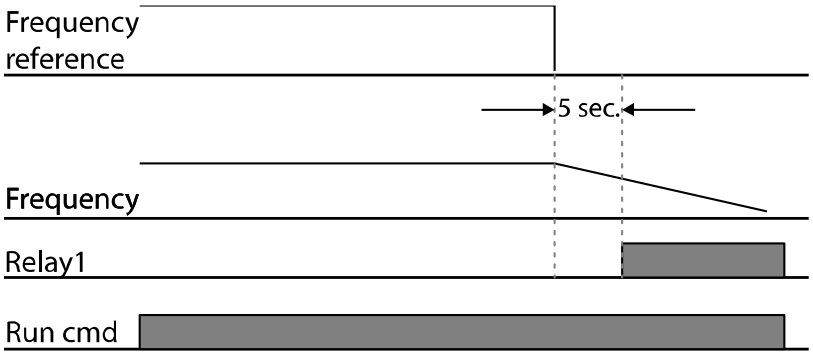

Note

If speed command is lost while using communication options or the integrated RS-485 communication, the protection function operates after the command loss decision time set at Pr.13 (Lost Cmd Time) is passed.

6.2.5 Dynamic Braking (DB) Resistor Configuration

For G100 series, the braking resistor circuit is integrated inside the inverter.

Group	Code	Name	Setting		Setting Range	Unit
Pr	66	DB resistor warning level	10		0–30	%
OU	31	Multi-function relay 1 item	31	DB Warn %ED	-	-
	33	Multi-function relay 2 item				

Dynamic Braking Resistor Setting Details

Code and Features	Description
Pr.66 DB Warn %ED	Set the mount of braking resistor (%ED: Duty cycle) for use. Braking resistor configuration sets the rate at which the braking resistor operates for one operation cycle. The maximum time for continuous braking is 15 sec and the braking resistor signal is not output from the inverter after the 15 sec period has expired. The time until braking resistance is available again after continuous use of braking resistance for 15 seconds is calculated as below. $T = \frac{(100\% - \%ED) \times 15}{\%ED} [s]$ If the braking resistor usage rate is set to 0%, braking resistance can be used without usage rate restriction. However, precaution is necessary since there is risk of fire if the braking resistance usage is higher than the power consumption of braking resistance. An example of braking resistor set up is as follows: $\%ED = \frac{T_dec}{T_acc + T_steady + T_dec + T_stop} \times 100\%$ 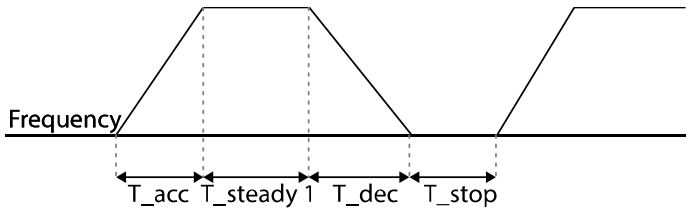 [Example 1] $\%ED = \frac{T_dec}{T_dec + T_steady1 + T_acc + T_steady2} \times 100\%$ 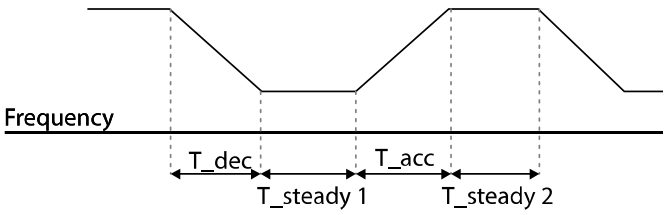 [Example 2]

Code and Features	Description
	• **T_acc:** Acceleration time to set frequency • **T_steady:** Constant speed operation time at set frequency • **T_dec:** Deceleration time to a frequency lower than constant speed operation or the stop time from constant speed operation frequency • **T_stop:** Stop time until operation resumes

Caution

Do not set the braking resistor to exceed the resistor's power rating. If overloaded, it can overheat and cause a fire. When using a resistor with a heat sensor, the sensor output can be used as an external trip signal for the inverter's multi-function input.

6.2.6 Under load Fault Trip and Warning

Group	Code	Name	Setting		Setting Range	Unit
Pr	04	Load level setting	0	Normal Duty	-	-
	25	Under load warning selection	1	Yes	0–1	-
	26	Under load warning time	10.0		0–600	sec
	27	Under load fault selection	1	Free-Run	0-3	-
	28	Under load fault time	30.0		0–600	sec
	29	Under load lower limit level	30		10–100	%
	30	Under load upper limit level	30		10–100	%

Under Load Trip and Warning Setting Details

Code and Features	Description
Pr.27 UL Trip Sel	Sets the occurrence of the under load trip. If set to 0 (None), the underload fault trip is not detected. If set to 1 (Free-Run), the output is blocked in an underload fault trip situation. If set to 2 (Dec), the motor decelerates and stops when an underload trip occurs. If set to 3 (Underload Sleep), When PID operation, inverter will start PID Sleep operation in underload trip situation. and according to PID Wake Up setting, it will start Wake Up operation.
Pr.25 UL Warn Sel	Sets the underload warning options. Set to 1 (Yes) and set the multi-function output terminals (at OU.31 and 33) to 7 (UnderLoad). The warning signals are output when an underload condition arises.
Pr.26 UL Warn Time, Pr.28 UL Trip Time	The protection function operates when the underload level condition explained above is maintained for a set warning time or fault trip time. This function does not operate if energy-saving operation is activated at Ad.50 (E-Save Mode).
Pr.29 UL LF Level, Pr.30 UL BF Level	• Setting Heavy Duty - Do not support Pr.29. - At Pr.30, the underload level is decided based on the motor's rated current.

Code and Features	Description
	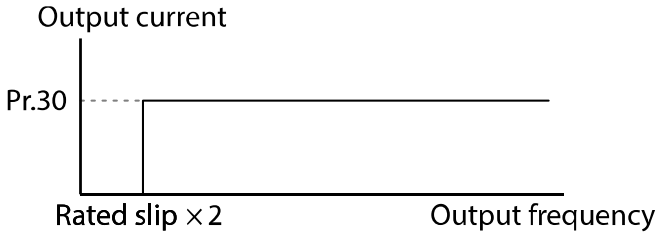 • Setting Normal Duty - At Pr.29, the under load rate is decided based on twice the operation frequency of the motor's rated slip speed (bA.12 Rated Slip). - At Pr.30, the under load rate is decided based on the base frequency set at dr.18 (Base Freq). An upper limit and lower limit is based on the inverter's rated current. 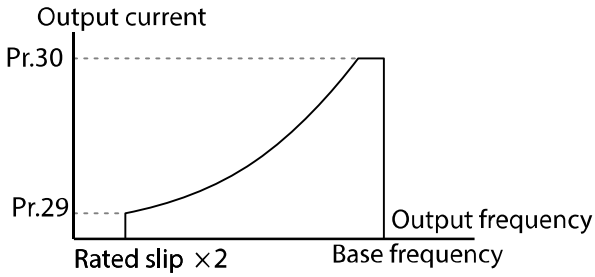

6.2.7 Fan Fault Detection

Group	Code	Name	Setting		Setting Range	Unit
Pr	79	Cooling fan fault selection	1	Warning	0-2	-
OU	31	Multi-function relay 1 item	8	FAN Warning	-	-
OU	33	Multi-function relay 2 item				

Fan Fault Detection Setting Details

Code and Features	Description
Pr.79 FAN Trip Mode	Set the cooling fan fault mode. Configuration / Function 0 Trip: The inverter output is blocked and the fan trip is displayed when a cooling fan error is detected. 1 Warning: When OU.31 (Relay 1) and OU.33 (Relay 2) are set to 8 (FAN Warning), the fan error signal is output and the operation continues. 2 Temp. Warning: When an abnormality is detected in the cooling fan, it operates as Warning if the heat sink temperature is less than 90 degrees, and Trip if it is more than 90 degrees.
OU.31 Relay 1, OU.33 Relay 2	When the code value is set to 8 (FAN Warning), the fan error signal is output and operation continues. However, when the inverter inside temperature rises above a certain level, output is blocked due to activation of overheat protection.

Caution

If the cooling fan failure mode is used as Warning or Temp. Warning, the operation can continue even if a cooling fan failure is detected, which can result in a decrease in product life due to an increase in internal temperature.

6.2.8 Lifetime Diagnosis of Components

Lifetime Diagnosis for Fans

Enter the Pr.87 (Fan exchange warning level) code (%). After the selected usage (%) is reached (out of 43,200 hours), the fan exchange warning message will appear in the multi-functional output or keypad.

The total fan usage level (%) appears at Pr.86. When exchanging fans, you may initialize the accumulated value to 0 by setting the Pr.88 (Initializing accumulated time for cooling fans) to 1.

Group	Code	Name	Setting		Setting Range	Unit
Pr	86	Accumulated percent of fan usage	0.0		0.0–6553.5	%
	87	Fan exchange warning Level	90.0		0.0–100.0	%
OU	31	Multi-function relay 1 item	37	FAN Exchange	-	-
	33	Multi-function relay 2 item				

6.2.9 Low Voltage Fault Trip

When inverter input power is lost and the internal DC link voltage drops below a certain voltage level, the inverter stops output and a low voltage trip occurs.

Group	Code	Name	Setting		Setting Range	Unit
Pr	81	Low voltage trip decision delay time	0.0		0–60	sec
OU	31	Multi-function relay 1 item	11	Low Voltage	-	-
	33	Multi-function relay 2 item				

Low Voltage Fault Trip Setting Details

Code and Features	Description
Pr.81 LVT Delay	If the Ou.31 code value is set to 11 (Low Voltage), the inverter output is blocked first when the low voltage trip occurs and the trip is handled after a set time. You can generate a warning signal on the low voltage trip using the multi-function relay. The LVT Delay time is not applied on the warning signal.

6.2.10 Output Block by Multi-Function Terminal

When the multi-function input terminal is set as the output block signal terminal and the signal is input to the terminal, then the operation stops.

Group	Code	Name	Setting		Setting Range	Unit
In	65–72	Px terminal setting options	5	BX	-	-

Output Block by Multi-Function Terminal Setting Details

Code and Features	Description
In.65–72 Px Define	When the operation of the multi-function input terminal is set to 5 (BX) and is turned on during operation, the inverter blocks the output and 'BX' is displayed on the keypad display. While 'BX' is displayed on the keypad screen, the inverter's operation information including the operation frequency and current at the time of BX signal can be monitored. The inverter resumes operation when the BX terminal turns off and operation command is input.

6.2.11 Trip Status Reset

Restart the inverter using the keypad or digital input terminal, to reset the trip status.

Group	Code	Name	Setting		Setting Range	Unit
In	65–72	Px terminal setting options	3	RST	-	-

Trip Status Reset Setting Details

Code and Features	Description
In.65–72 Px Define	Press [Stop/Reset] key on the keypad or use the multi-function input terminal to restart the inverter. Set the multi-function input terminal to 3 (RST) and turn on the terminal to reset the trip status.

6.2.12 Inverter Diagnosis State

Check the diagnosis of components or devices for inverter to check if they need to be replaced.

Group	Code	Name	Setting	Setting Range		Unit
Pr	89	FAN replacement warning		Bit	00–01	Bit
				00	-	
				01	FAN Warning	

6.2.13 Operation Mode on Option Card Trip

Option card trips may occur when an option card is used with the inverter. Set the operation mode for the inverter when a communication error occurs between the option card and the inverter body, or when the option card is detached during operation.

Group	Code	Name	Setting		Setting Range	Unit
Pr	80	Motion selection at option trip	0	None	0–3	-
			1	Free-Run		
			2	Dec		

Operation Mode on Option Trip Setting Details

Code and Features	Description		
Pr.80 Opt Trip Mode	Configuration		Function
	0	None	No operation.
	1	Free-Run	The inverter output is blocked and fault trip information is shown on the keypad.
	2	Dec	The motor decelerates to the value set at Pr.07 (Trip Dec Time).

6.2.14 No Motor Trip

If an operation command is run when the motor is disconnected from the inverter output terminal, a ‘no motor trip’ occurs and a protective operation is performed by the system.

Group	Code	Name	Setting		Setting Range	Unit
Pr	31	No motor motion at detection	0	None	0–1	-
			1	Free-run	-	-
	32	No motor detection current level	5		1–100	%
	33	No motor detection time	3.0		0.1–10	sec

No Motor Trip Setting Details

Code and Features	Description
Pr.32 No Motor Level, Pr.33 No Motor Time	If the output current value [based on the rated current (bA.13)] is lower than the value set at Pr.32 (No Motor Level), and if this continues for the time set at Pr.33 (No Motor Time), a ‘no motor trip’ occurs.

Caution

If bA.07 (V/F Pattern) is set to 1 (Square), set Pr.32 (No Motor Level) to a value lower than the factory default. Otherwise, ‘no motor trip’ due to a lack of output current will result when the ‘no motor trip’ operation is set.

6.2.15 Low Voltage Trip 2

If you set the Pr.82 (LV2 Selection) code to Yes (1), the trip notification is displayed when a low voltage trip occurs. In this case, even if the voltage of the DC Link condenser is higher than the trip level, the LV2 trip will not be retrieved. To retrieve the trip, reset the inverter. The trip history will not be saved.

Group	Code	Name	Setting	Setting Range	Unit
Pr	82	LV2 Selection	Yes (1)	0/1	-

6.2.16 Inverter Pre-overheat Warning

This feature outputs a warning if the inverter temperature exceeds the temperature set by the user in Pr.77. The user can set up the operation for when the warning is generated before four types of overheating and output warning with the multi-function relay.

Group	Code	Name	Setting	Setting Range		Unit
Pr	77	Pre-overheat warning temperature	90	90–110		℃
	78	Pre-overheat warning operation setting	0: None	0	None	-
				1	Warning	
				2	Free-Run	
				3	Dec	
OU	31, 33	Multi-function relay 1 item Multi-function relay 2 item	41: Pre Over Heat	0–44		-

Pre-overheat Warning Operation Setting Details

Code and Features	Description
Pr.77 Pre-overheat warning temperature	Set the pre-overheat warning temperature. Setting Range: 90–110[℃]
Pr.78 Pre-overheat warning operation setting	0: None → No pre-overheat warning operation 1: Warning → If the pre-overheat warning temperature is exceeded, warning message is displayed on the keypad and inverter will operate normally. 2: Free-Run → If the pre-overheat warning temperature is exceeded, a pre-overheat trip occurs and free-run will stop. 3: Dec → If the pre-overheat warning temperature is exceeded, a pre-overheat trip occurs and deceleration will stop.
OU.31, 33 multi-function relay 1, 2	38: Pre-overheat warning → Signal is output if a pre-overheat warning or trip occurs.

6.2.17 Torque Detection Protection Action

This feature outputs torque status to the multi-function relay if a motor overload or sudden underload occurs. This feature is activated when the multi-function relay (OU.31, 33) is set to 43, 44.

Group	Code	Name	Setting		Setting Range	Unit
OU	31, 33	Multi-function relay 1 item Multi-function relay 2 item	43 44	Prt Trq Det 1 Prt Trq Det 2	0–44	-
	67*	Torque detection 1 operation setting	0: None		0–8	-
	68*	Torque detection 1 level	100		0–200.0	%
	69*	Torque detection 1 delay time	0.1		0.0–10.0	sec
	70**	Torque detection 2 operation setting	0: None		0–8	-
	71**	Torque detection 2 level	100		0–200.0	%
	72**	Torque detection 2 delay time	0.1		0.0–10.0	sec

*Visible only when the multi-function relay (OU.31, 33) is set to 43 (Prt Trq Det 1).
**Visible only when the multi-function relay (OU.31, 33) is set to 44 (Prt Trq Det 2).

The over and under torque detection action operates as shown in the figure by having a hysteresis level of 10% compared to the motor's rated current.

Over Torque Detection Action

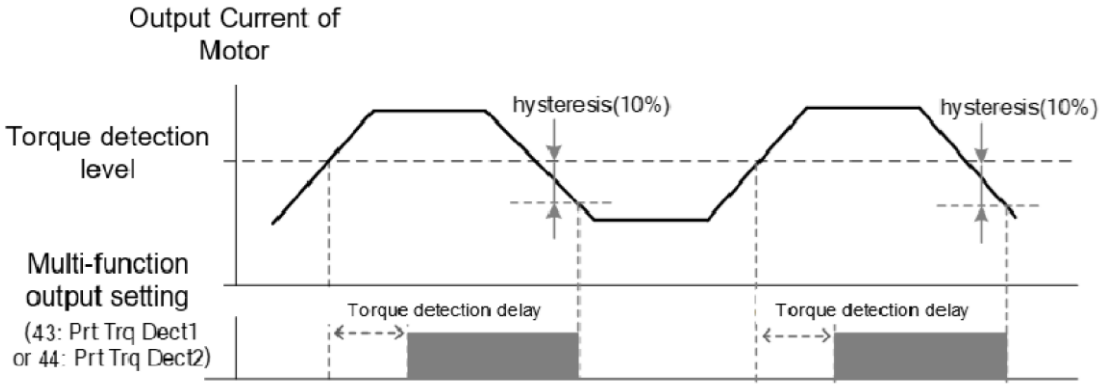

Under Torque Detection Action

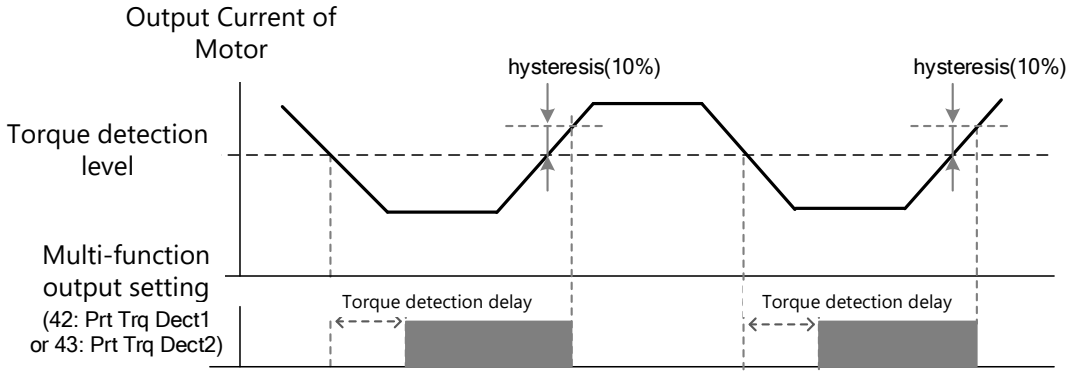

The over and under torque detection level set as OU.68, 71 parameters are set as the ratio on motor's rated current.

Torque Detection Operation Setting Details

Code and Features	Description
OU.67, 70 Torque detection operation setting	0: None → Torque detection is not operating. 1: OT CmdSpd Warn → Detects over torque and outputs warning only when the inverter output frequency is the same as the command frequency. 2: OT Warning → Detects over torque during the operation and outputs warning. 3: OT CmdSpdTrip → Detects over torque and generates a trip only when the inverter output frequency is the same as the command frequency. 4: OT Trip → Detects over torque during operation and generates a trip. 5: UT CmdSpd Warn → Detects under torque and outputs warning only when the inverter output frequency is the same as the command frequency. 6: OT Warning → Detects under torque during the operation and outputs warning. 7: UT CmdSpd Trip → Detects under torque and generates a trip only when the inverter output frequency is the same as the command frequency. 8: UT Trip → Detects under torque during operation and generates a trip.
OU.68, 71 Torque detection level	Sets the torque detection level of torque detection 1, 2. The set value is a% of the motor's rated current. The detection level must be higher than bA.14 no load current value.
OU.69, 72 Torque detection delay time	Sets the delay time on torque detection 1, 2. When over or under torque is detected, a warning or trip is output after the torque detection delay time.

6.3 Fault/Warning List

The following list shows the types of faults and warnings that can occur while using the G100 inverter. Please refer to **6 Learning Protection Features** on page **206** for details about faults and warnings.

Category		Description
Major fault	Latch	Over current trip
		Over voltage trip
		External signal trip
		Temperature sensor trip
		ARM short current fault trip
		Option fault trip*
		Over heat trip
		Out phase open trip
		In phase open trip
		Inverter overload trip
		Ground fault trip**
		Fan trip
		Motor over heat trip
		PTC Trip
		Pre-PID operation failure
		I/O board link trip
		External brake trip
		No motor trip
		Low voltage trip during operation
		Inverter pre-overheat trip
		Safety Trip(Terminal A)
		Safety Trip(Terminal B)
		Over torque 1 trip
		Under torque 1 trip
		Over torque 2 trip
		Under torque 2 trip
	Level type	Low voltage fault trip
		Emergency stop trip

Category		Description
		Command loss trip
		Communication option command loss trip
		Base Block Trip
	Fatal	External memory error
		Analog input error
		CPU Watch Dog fault trip
Minor fault		Motor overload trip
		Motor light load trip
Warning		Command loss fault trip warning
		Overload warning
		Under load warning
		Inverter overload warning
		PTC Warning
		Fan operation warning
		Braking resistor braking rate warning
		Rotor time constant tuning error
		Fan replacement warning
		Inverter pre-overheat warning
		Over torque 1 warning
		Under torque 1 warning
		Over torque 2 warning
		Under torque 2 warning

*Appears only when using the option board.

**Ground detection feature is provided only in 4.0 kW, 2.2 kW 200 V, and 5.5 - 22 kW products. Other products protect inverter with OVT/OCT/OC2 trip when grounding occurs.

7 RS-485 Communication Features

This section in the user manual explains how to control the inverter with a PLC or a computer over a long distance using the RS-485 communication features. To use the RS-485 communication features, connect the communication cables and set the communication parameters on the inverter. Refer to the communication protocols and parameters to configure and use the RS-485 communication features.

7.1 Communication Standards

Following the RS-485 communication standards, G100 products exchange data with a PLC and computer. The RS-485 communication standards support the Multi-drop Link System and offer an interface that is strongly resistant to noise. Please refer to the following table for details about the communication standards.

Items	Standard
Communication method/ Transmission type	RS-485/Bus type, Multi-drop Link System
Inverter type name	G100
Number of connected inverters/ Transmission distance	Maximum of 16 inverters / Maximum1,200 m (recommended distance: within 700 m)
Recommended cable size	0.75mm², (18AWG), Shielded Type Twisted-Pair (STP) Wire
Installation type	Dedicated terminals (S+/S-) on the control terminal block Connected to the RJ-45 connector (no 1 pin S+, no 8 pin S-)
Power supply	Supplied by the inverter-insulated power source from the inverter's internal circuit
Baud rate	1,200/2,400/4,800/9,600/19,200/38,400/57,600/115,200 bps
Control procedure	Asynchronous communications system
Communication system	Half duplex system
Character system	Modbus-RTU: Binary / LS INV 485: ASCII
Stop bit length	1-bit
Frame error check	2 bytes
Parity check	None/Even/Odd

Connect the communication lines by referring to the illustration below.

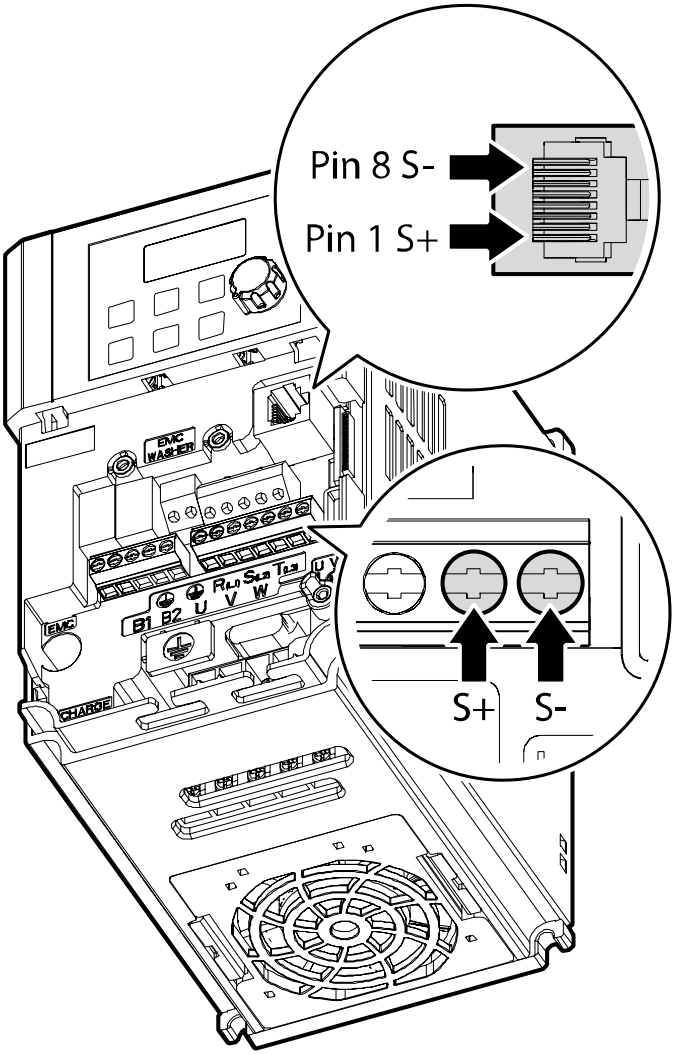

Use 2Pair STP (Shielded twisted Pair) cable (using only no.1 pin S+, no.8 pin S-/ no.1 and no.8 pins are twisted types, no.2 pin to no.7 pin are not allowed) and a RJ45 STP plug. Use a RJ45 coupler for connection between products and cable extension (Y type LAN coupler where STP can be mounted). (Use LAN standardized products for cables, plugs, and couplers: CAT5, CAT5e, CAT6.)

Note

- Communication cables must be installed by separating from the power cable.
- After checking that the power of the inverter is fully blocked, connect the RS-485 communication line to S+ or S-terminal of the control terminal or RJ45 connector (no.1 pin S+, no.8 pin S-) of the I/O board.

7.2 Communication System Configuration

In an RS-485 communication system, the PLC or computer is the master device and the inverter is the slave device. When using a computer as the master, the RS-232converter must be integrated with the computer, so that it can communicate with the inverter through the RS-232/RS-485 converter. Specifications and performance of converters may vary depending on the manufacturer, but the basic functions are identical. Please refer to the converter manufacturer's user manual for details about features and specifications.

Connect the wires and configure the communication parameters on the inverter by referring to the following illustration of the communication system configuration.

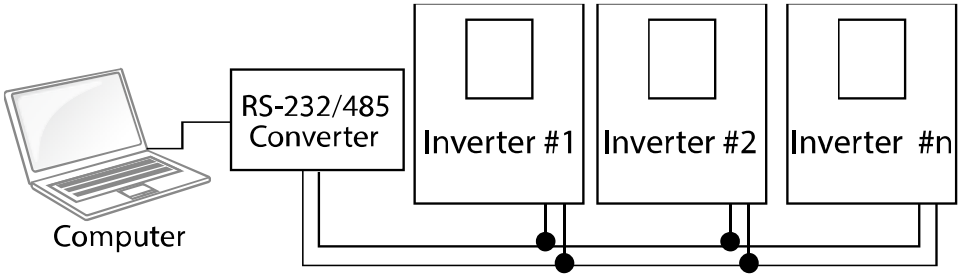

7.2.1 Communication Line Connection

After checking that the power of the inverter is fully blocked, connect the RS-485 communication line to S+ or S-terminal of the control terminal or RJ45 connector (no.1 pin S+, no.8 pin S-) of the I/O board. The maximum number of inverters you can connect is 16. For communication lines, use shielded twisted pair (STP) cables.

The maximum length of the communication line is 1,200 meters, but it is recommended to use no more than 700 meters of communication line to ensure stable communication. Please use a repeater to enhance the communication speed when using a communication line longer than 1,200 meters or when using a large number of devices. A repeater is effective when smooth communication is not available due to noise interference.

7.2.2 Setting Communication Parameters

Before proceeding with setting communication configurations, make sure that the communication lines are connected properly. Turn on the inverter and set the communication parameters.

Group	Code	Name	Setting		Setting Range	Unit
CM	01	Built-in communication inverter ID	1		1–250	-
	02	Built-in communication protocol	0	ModBus RTU	0, 2	-
	03	Built-in baud rate	3	9600 bps	0–7	-
	04	Built-in communication frame setting	0	D8/PN/S1	0–3	-
	05	Transmission delay after reception	5		0–1000	ms

Communication Parameters Setting Details

<table>
<tr><th>Code and Features</th><th>Description</th></tr>
<tr><td>CM.01
Int485 St ID</td><td>Set the inverter station ID between 1 and 250.</td></tr>
<tr><td>CM.02
Int485 Proto</td><td>Select one of the two built-in protocols: Modbus-RTU or LS INV 485.
<table>
<tr><th colspan="2">Configuration</th><th>Function</th></tr>
<tr><td>0</td><td>Modbus-RTU</td><td>Modbus-RTU compatible protocol</td></tr>
<tr><td>2</td><td>LS INV 485</td><td>Dedicated protocol for the LS inverter</td></tr>
</table></td></tr>
<tr><td>CM.03
Int485 Baud rate</td><td>Set a communication setting speed up to 115,200 bps.
<table>
<tr><th>Configuration</th><th>Function</th></tr>
<tr><td>0</td><td>1200bps</td></tr>
<tr><td>1</td><td>2400bps</td></tr>
<tr><td>2</td><td>4800bps</td></tr>
<tr><td>3</td><td>9600bps</td></tr>
<tr><td>4</td><td>19200bps</td></tr>
<tr><td>5</td><td>38400bps</td></tr>
<tr><td>6</td><td>56Kbps</td></tr>
<tr><td>7</td><td>115 Kbps (115,200 bps)</td></tr>
</table></td></tr>
</table>

<table>
<tr><th>Code and Features</th><th>Description</th></tr>
<tr><td>CM.04
Int485 Mode</td><td>Set a communication configuration. Set the data length, parity check method, and the number of stop bits.
<table>
<tr><th colspan="2">Configuration</th><th>Function</th></tr>
<tr><td>0</td><td>D8/PN/S1</td><td>8-bit data / no parity check / 1 stop bit</td></tr>
<tr><td>2</td><td>D8/PE/S1</td><td>8-bit data / even parity / 1 stop bit</td></tr>
<tr><td>3</td><td>D8/PO/S1</td><td>8-bit data / odd parity / 1 stop bit</td></tr>
</table></td></tr>
<tr><td>CM.05
Resp Delay</td><td>Set the response time for the slave (inverter) to react to the request from the master. Response time is used in a system where the slave device response is too fast for the master device to process. Set this code to an appropriate value for smooth master-slave communication.
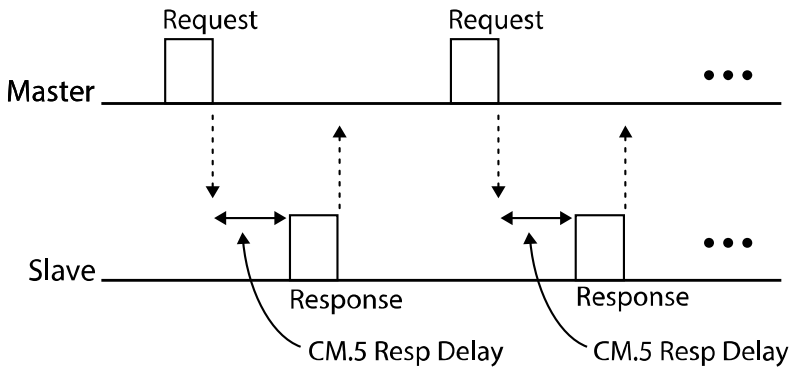
</td></tr>
</table>

7.2.3 Setting Operation Command and Frequency

Set the drv code of the operation group to 3 (Int 485) and the Frq code of the operation group to 6 (Int 485) in order to set the operation command and frequency of the common area parameters via communication.

Group	Code	Name	Setting		Setting Range	Unit
Operation	drv	Command Source	3	Int 485	0–4	-
	Frq	Frequency reference source	6	Int 485	0–8	-

7.2.4 Command Loss Protective Operation

Configure the command loss decision standards and protective operations run when a communication problem lasts for a specified period of time.

Command Loss Protective Operation Setting Details

<table>
<tr><th>Code and Features</th><th>Description</th></tr>
<tr><td>Pr.12 Lost Cmd Mode,
Pr.13 Lost Cmd Time</td><td>Select the operation to run when a communication error has occurred and lasted exceeding the time set at Pr.13.
<table>
<tr><th colspan="2">Configuration</th><th>Function</th></tr>
<tr><td>0</td><td>None</td><td>The speed command immediately becomes the operation frequency without any protection function.</td></tr>
<tr><td>1</td><td>Free-Run</td><td>The inverter blocks output. The motor performs in free-run condition.</td></tr>
<tr><td>2</td><td>Dec</td><td>The motor decelerates and then stops.</td></tr>
<tr><td>3</td><td>Hold Input</td><td>The inverter continues in the speed command input before the loss of speed.</td></tr>
<tr><td>4</td><td>Hold Output</td><td>The inverter continues in the operation frequency before the loss of speed.</td></tr>
<tr><td>5</td><td>Lost Preset</td><td>The inverter operates at the frequency set at Pr. 14 (Lost Preset F).</td></tr>
</table></td></tr>
<tr><td>Pr.67 Lost Opt Cmd Mode
Pr.68 Lost Opt Cmd Delay</td><td>Select the operation of the inverter when a communication option abnormality occurs during the time set in code Pr.68, which operates only when the operating command or frequency command is set to FieldBus.
<table>
<tr><th colspan="2">Configuration</th><th>Function</th></tr>
<tr><td>0</td><td>None</td><td>The speed command immediately becomes the operation frequency without any protection function.</td></tr>
<tr><td>1</td><td>Free-Run</td><td>The inverter blocks output. The motor performs in free-run condition.</td></tr>
<tr><td>2</td><td>Dec</td><td>The motor decelerates and then stops.</td></tr>
</table></td></tr>
</table>

7.2.5 Setting IDLE Mode behavior

You can set the behavior in the inverter when the parent controller is in the IDLE state.

Group	Code	Name	Setting		Setting Range	Unit
CM	28	Idle state operation mode	0	None	0-2	-
			1	Free-Run		
			2	Dec		
OU	31,33	Relay 1,2	39	Comm Idle sts	0-45	-

IDLE Mode Operation Configuration Details

<table>
<tr><th>Code and Features</th><th>Description</th></tr>
<tr><td>CM.28 Comm. Idle Sts Mode</td><td>Select the operation of the inverter when the parent controller is in the IDLE state. The CM.28 (Idle state operation mode) parameter is only visible and available if the communication options with the parent controller support IDLE mode. If IDLE mode is supported, the set operation is performed without any delay when the IDLE status is confirmed.

The IDLE state is not a fault condition of the inverter and will not result in a trip. However, it will be displayed as a Warning so that you can check the IDLE state. It can also be checked via the multifunction output (39: Comm Idle Sts) if necessary.
<table>
<tr><th colspan="2">Configuration</th><th>Function</th></tr>
<tr><td>0</td><td>None</td><td>The speed command immediately becomes the operation frequency without any protection function.</td></tr>
<tr><td>1</td><td>Free-Run</td><td>The inverter blocks output. The motor performs in free-run condition.</td></tr>
<tr><td>2</td><td>Dec</td><td>The motor decelerates and then stops.</td></tr>
</table></td></tr>
</table>

Caution

In order to drive after the IDLE state is released from the stop state through the IDLE state operation, the communication operation command must be changed to stop and the operation command must be authorized.
Regardless of the setting of CM.28, the 'Comm Idle Sts' warning will occur in the IDLE state of the parent controller.

7.2.6 Setting Virtual Multi-Function Input

Multi-function input can be controlled using a communication address (0h0385). Set codes CM.70–77 to the functions to operate, and then set the BIT relevant to the function to 1 at 0h0385 to operate it. Virtual multi-function operates independently from In.65–72 analog multi-function inputs and cannot be set redundantly. Virtual multi-function input can be monitored using CM.86 (Virt DI Status). Before you configure the virtual multi-function inputs, set the DRV code according to the command source.

Group	Code	Name	Setting		Setting Range	Unit
CM	70–77	Communication multi-function input x	0	None	0–49	-
	86	Communication multi-function input monitoring	-	-	-	-

Example: When sending an FX command by controlling virtual multi-function input in the common area via Int485, set CM.70 to FX. Then, assign a 0h0001 value to the communication address 0h0385 to operate the forward direction operation (FX) feature.

Note

The following are values and functions that are applied to address0h0385:

Setting	Function
0h0001	Forward operation (FX)
0h0003	Reverse operation (RX)
0h0000	Stop

7.2.7 Saving Parameters Defined by Communication

If you turn off the inverter after setting the common area parameters or keypad parameters via communication and operate the inverter, the changes are lost and the values changed via communication revert to the previous setting values when you turn on the inverter.

Setting address 0h03E0 to 0 and then setting it again to 1 via communication allows the existing parameter settings to be saved. However, setting address 0h03E0 to 1 and then setting it to 0 does not carry out the same function.

7.2.8 Total Memory Map for Communication

Communication Area	Memory Map	Description
Communication common compatible area	0h0000–0h00FF	iS5, iP5A, iV5, iG5A compatible area
Parameter registration type area	0h0100–0h01FF	Areas registered at CM.31–38 and CM.51–58
G100 communication common area	0h0300–0h037F	Inverter monitoring area
	0h0380–0h03DF	Inverter control area
	0h03E0–0h03FF	Inverter memory control area
	0h0400–0h0FFF	Reserved
	0h1100	dr Group
	0h1200	bA Group
	0h1300	Ad Group
	0h1400	Cn Group
	0h1500	In Group
	0h1600	OU Group
	0h1700	CM Group
	0h1800	AP Group
	0h1B00	Pr Group
	0h1C00	M2 Group
	0h1900	US Group
	0h1A00	UF Group

7.2.9 Parameter Group for Data Transmission

By defining a parameter group for data transmission, the communication addresses registered in the communication function group (CM) can be used in communication. Parameter group for data transmission may be defined to transmit multiple parameters at once, into the communication frame.

Group	Code	Name	Setting	Setting Range	Unit
CM	31–38	Output communication address x	-	0000–FFFF	Hex
	51–58	Input communication address x	-	0000–FFFF	Hex

Currently Registered CM Group Parameter

Comm. Address	Parameter	Assigned Content by Bit
0h0100–0h0107	Status Parameter-1–Status Parameter-8	Parameter communication code value registered at CM.31–38 (Read-only)
0h0110–0h0117	Control Parameter-1–Control Parameter-8	Parameter communication code value registered at CM.51–58 (Read/Write access)

Note

When registering control parameters, register the operation speed (0h0005, 0h0380, 0h0381) and operation command (0h0006, 0h0382) parameters at the end of a parameter control frame. The operation speed and operation command must be registered to the highest number of the parameter control-h (Para Control-h).

For example, when the Para Ctrl Num is 5, register the operation speed to Para Control-4 and the operation command to Para Control-5.

7.3 Communication Protocol

The built-in RS-485 communication supports LS INV 485 and Modbus-RTU protocols.

7.3.1 LS INV 485 Protocol

The slave device (inverter) responds to read and write requests from the master device (PLC or PC). The basic types of protocol are as below.

Request

ENQ	Station ID	CMD	Data	SUM	EOT
1 byte	2 bytes	1 byte	n bytes	2 bytes	1 byte

Normal Response

ACK	Station ID	CMD	Data	SUM	EOT
1 byte	2 bytes	1 byte	n x 4 bytes	2 bytes	1 byte

Error Response

NAK	Station ID	CMD	Error Code	SUM	EOT
1 byte	2 bytes	1 byte	2 bytes	2 bytes	1 byte

- A request starts with ENQ and ends with EOT.
- A normal response starts with ACK and ends with EOT.
- An error response starts with NAK and ends with EOT.
- A station ID indicates the inverter number and is displayed as a two-byte ASCII-HEX string that uses characters 0–9 and A–F. ASCII-HEX is a hexadecimal notation composed of numbers between 0–9 and letters between A–F.
- CMD: Uses uppercase characters (returns an IF error if lowercase characters are encountered)—please refer to the following table.

Character	ASCII-HEX	Command
‘R’	52h	Read
‘W’	57h	Write
‘X’	58h	Request monitor registration
‘Y’	59h	Perform monitor registration

- Data will be displayed as ASCII-HEX. (For example, if data value is 3000: 3000 → ‘0’’B’’B’’8’h → 30h 42h 42h 38h).
- Error code: ASCII-HEX (refer to **7.3.1.4 Error Code** on page **251**)
- Transmission/reception buffer size: Transmission=39 bytes, Reception=44 bytes
- Monitor registration buffer: 8 Words
- SUM: Checks communication errors via sum.
  SUM=a total of the lower 8 bits values for station ID, command and error code (Station ID+CMD+error code) in ASCII-HEX.

  For example, a read request to read 1 address from address 3000 is SUM=‘0’+‘1’+’R’+‘3’+‘0’+‘0’+‘0’+’1’ = 30h+31h+52h+33h+30h+30h+30h+31h = 1 A7h. When calculating SUM, the control value like ENQ, ACK, and NAK are not included. Since SUM takes a lower byte, A7h becomes SUM.

ENQ	Station ID	CMD	Address	Number of Addresses	SUM	EOT
05h	‘01’	‘R’	‘3000’	‘1’	‘A7’	04h
1 byte	2 bytes	1 byte	4 bytes	1 byte	2 bytes	1 byte

Note

Broadcasting
Broadcasting sends commands to all inverters connected to the network simultaneously. When commands are sent from station ID 255, each inverter acts on the command regardless of the station ID. However, no response is given.

7.3.1.1 Detailed Read Protocol

Read Request: Reads successive n words from address XXXX.

ENQ	Station ID	CMD	Address	Number of Addresses	SUM	EOT
05h	‘01’–’FA’	‘R’	‘XXXX‘	‘1’–‘8’ = n	‘XX’	04h
1 byte	2 bytes	1 byte	4 bytes	1 byte	2 bytes	1 byte

Total bytes=12. Characters are displayed inside single quotation marks (‘).

Read Normal Response

ACK	Station ID	CMD	Data	SUM	EOT
06h	'01'–'FA'	'R'	'XXXX'	'XX'	04h
1 byte	2 bytes	1 byte	n x 4 bytes	2 bytes	1 byte

Total bytes= (7 x n x 4): a maximum of 39

Read Error Response

NAK	Station ID	CMD	Error Code	SUM	EOT
15h	'01'–'FA'	'R'	'**'	'XX'	04h
1 byte	2 bytes	1 byte	2 bytes	2 bytes	1 byte

Total bytes=9

7.3.1.2 Detailed Write Protocol

Write Request

ENQ	Station ID	CMD	Address	Number of Addresses	Data	SUM	EOT
05h	'01'–'FA'	'W'	'XXXX'	'1'–'8' = n	'XXXX…'	'XX'	04h
1 byte	2 bytes	1 byte	4 bytes	1 byte	n x 4 bytes	2 bytes	1 byte

Total bytes= (12 x n x 4): a maximum of 44

Write Normal Response

ACK	Station ID	CMD	Data	SUM	EOT
06h	'01'–'FA'	'W'	'XXXX…'	'XX'	04h
1 byte	2 bytes	1 byte	n x 4 bytes	2 bytes	1 byte

Total bytes= (7 x n x 4): a maximum of 39

Write Error Response

NAK	Station ID	CMD	Error Code	SUM	EOT
15h	'01'–'FA'	'W'	'**'	'XX'	04h
1 byte	2 bytes	1 byte	2 bytes	2 bytes	1 byte

Total bytes=9

7.3.1.3 Monitor Registration Detailed Protocol

Monitor registration request is made to designate the type of data that requires continuous monitoring and periodic updating.

Monitor Registration Request: Registration requests for n addresses (where n refers to the number of addresses. The addresses do not have to be contiguous.)

ENQ	Station ID	CMD	Number of Addresses	Address	SUM	EOT
05h	'01'–'FA'	'X'	'1'–'8'=n	'XXXX…'	'XX'	04h
1 byte	2 bytes	1 byte	1 byte	n x 4 bytes	2 bytes	1 byte

Total bytes= (8 x n x 4): a maximum of 40

Monitor Registration Normal Response

ACK	Station ID	CMD	SUM	EOT
06h	'01'–'FA'	'X'	'XX'	04h
1 byte	2 bytes	1 byte	2 bytes	1 byte

Total bytes=7

Monitor Registration Error Response

NAK	Station ID	CMD	Error Code	SUM	EOT
15h	'01'–'FA'	'X'	'**'	'XX'	04h
1 byte	2 bytes	1 byte	2 bytes	2 bytes	1 byte

Total bytes=9

Monitor Registration Perform Request: A data read request for a registered address, received from a monitor registration request

ENQ	Station ID	CMD	SUM	EOT
05h	'01'–'FA'	'Y'	'XX'	04h
1 byte	2 bytes	1 byte	2 bytes	1 byte

Total bytes=7

Monitor Registration Execution Normal Response

ACK	Station ID	CMD	Data	SUM	EOT
06h	'01'–'FA'	'Y'	'XXXX…'	'XX'	04h
1 byte	2 bytes	1 byte	n x 4 bytes	2 bytes	1 byte

Total bytes= (7 x n x 4): a maximum of 39

Monitor Registration Execution Error Response

NAK	Station ID	CMD	Error Code	SUM	EOT
15h	'01'–'FA'	'Y'	'**'	'XX'	04h
1 byte	2 bytes	1 byte	2 bytes	2 bytes	1 byte

Total bytes=9

7.3.1.4 Error Code

Items	Abbreviation	Description
ILLEGAL FUNCTION	IF	The requested function cannot be performed by a slave The corresponding function does not exist.
ILLEGAL DATA ADDRESS	IA	The received parameter address is invalid at the slave.
ILLEGAL DATA VALUE	ID	The received parameter data is invalid at the slave.
WRITE MODE ERROR	WM	Tried writing (W) to a parameter that does not allow writing (read-only parameters, or when writing is prohibited during operation)
FRAME ERROR	FE	The frame size does not match.

7.3.1.5 ASCII Code

Character	Hex	Character	Hex	Character	Hex
A	41	q	71	@	40
B	42	r	72	[	5B
C	43	s	73	\	5C
D	44	t	74	]	5D
E	45	u	75		5E
F	46	v	76		5F
G	47	w	77		60
H	48	x	78	{	7B
I	49	y	79	|	7C
J	4A	z	7A	}	7D
K	4B	0	30	-	7E
L	4C	1	31	BEL	07
M	4D	2	32	BS	08
N	4E	3	33	CAN	18
O	4F	4	34	CR	0D
P	50	5	35	DC1	11
Q	51	6	36	DC2	12
R	52	7	37	DC3	13
				DC4	14

Character	Hex	Character	Hex	Character	Hex
S	53	8	38	DEL	7F
T	54	9	39	DLE	10
U	55	space	20	EM	19
V	56	!	21	ACK	06
W	57	"	22	ENQ	05
X	58	#	23	EOT	04
Y	59	$	24	ESC	1B
Z	5A	%	25	ETB	17
a	61	&	26	ETX	03
b	62	'	27	FF	0C
c	63	(	28	FS	1C
d	64	)	29	GS	1D
e	65	*	2A	HT	09
f	66	+	2B	LF	0A
g	67	,	2C	NAK	15
h	68	-	2D	NUL	00
i	69	.	2E	RS	1E
j	6A	/	2F	S1	0F
k	6B	:	3A	SO	0E
l	6C	;	3B	SOH	01
m	6D	<	3C	STX	02
n	6E	=	3D	SUB	1 A
o	6F	>	3E	SYN	16
p	70	?	3F	US	1F
				VT	0B

7.3.2 Modbus-RTU Protocol

7.3.2.1 Function Code and Protocol (Unit: byte)

In the following section, station ID is the value set at CM.01 (Int485 St ID), and starting address is the communication address. (The starting address size is in bytes). For more information about communication addresses, refer to **7.4 DriveView9** on page **256**.

Function Code #03: Read Holding Register

Query Field Name	Response Field Name	
Station ID	Station ID	
Function(0x03)	Function (0x03)	
Starting Address Hi	Byte Count	
Starting Address Lo	Data Hi	# Number of Points
# of Points Hi	Data Lo	# Number of Points
# of Points Lo	…	# Number of Points
CRC Lo	…	# Number of Points
CRC Hi	Data Hi	# Number of Points
	Data Lo	# Number of Points
	CRC Lo	
	CRC Hi	

Function Code #04: Read Input Register

Query Field Name	Response Field Name	
Station ID	Station ID	
Function(0x04)	Function (0x04)	
Starting Address Hi	Byte Count	
Starting Address Lo	Data Hi	# Number of Points
# of Points Hi	Data Lo	# Number of Points
# of Points Lo	…	# Number of Points
CRC Lo	…	# Number of Points
CRC Hi	Data Hi	# Number of Points
	Data Lo	# Number of Points
	CRC Lo	
	CRC Hi	

Function Code #06: Preset Single Register

Query Field Name
Station ID
Function (0x06)
Starting Address Hi
Register Address Lo
Preset Data Hi
Preset Data Lo
CRC Lo
CRC Hi

Response Field Name
Station ID
Function (0x06)
Register Address Hi
Register Address Lo
Preset Data Hi
Preset Data Lo
CRC Lo
CRC Hi

Function Code #16 (hex 0h10): Preset Multiple Register

Query Field Name	
Station ID	
Function (0x10)	
Starting Address Hi	
Starting Address Lo	
# of Register Hi	
# of Register Lo	
Byte Count	
Data Hi	# Number of Points
Data Lo	
…	
…	
Data Hi	
Data Lo	
CRC Lo	
CRC Hi	

Response Field Name
Station ID
Function (0x10)
Starting Address Hi
Starting Address Lo
# of Register Hi
# of Register Lo
CRC Lo
CRC Hi

Exception Code

Code
01: ILLEGAL FUNCTION
02: ILLEGAL DATA ADRESS
03: ILLEGAL DATA VALUE
06: SLAVE DEVICE BUSY

Response

Field Name
Station ID
Function*
Exception Code
CRC Lo
CRC Hi

* The function value uses the top level bit for all query values.

Example of Modbus-RTU Communication in Use

When the muti-step acceleration time1 (Communication address 0x1246) is changed to 5.0 sec and the Multi-step deceleration time1 (Communication address 0x1247) is changed to 10.0 sec.

Frame Transmission from Master to Slave (Request)

Items	Station ID	Function	Starting Address	# of Register	Byte Count	Data 1	Data 2	CRC
Hex	0x01	0x10	0x1245	0x0002	0x04	0x0032	0x0064	0x4324
Description	CM.01 Int485 St ID	Preset Multiple Register	Starting Address -1 (0x1246-1)	-	-	50 (ACC time 5.0sec)	100 (DEC time 10.0sec)	-

Frame Transmission from Slave to Master (Response)

Items	Station ID	Function	Starting Address	# of Register	CRC
Hex	0x01	0x10	0x1245	0x0002	0x5565
Description	CM.01 Int485 St ID	Preset Multiple Register	Starting Address -1 (0x1246-1)	-	-

7.4 DriveView9

For the G100 series, you can set the parameters and monitor the inverter status using DriveView9 which is a PC software provided free of charge. In DriveView9, both Modbus-RTU and LS INV 485 protocols are available.

Reading/Writing Parameters

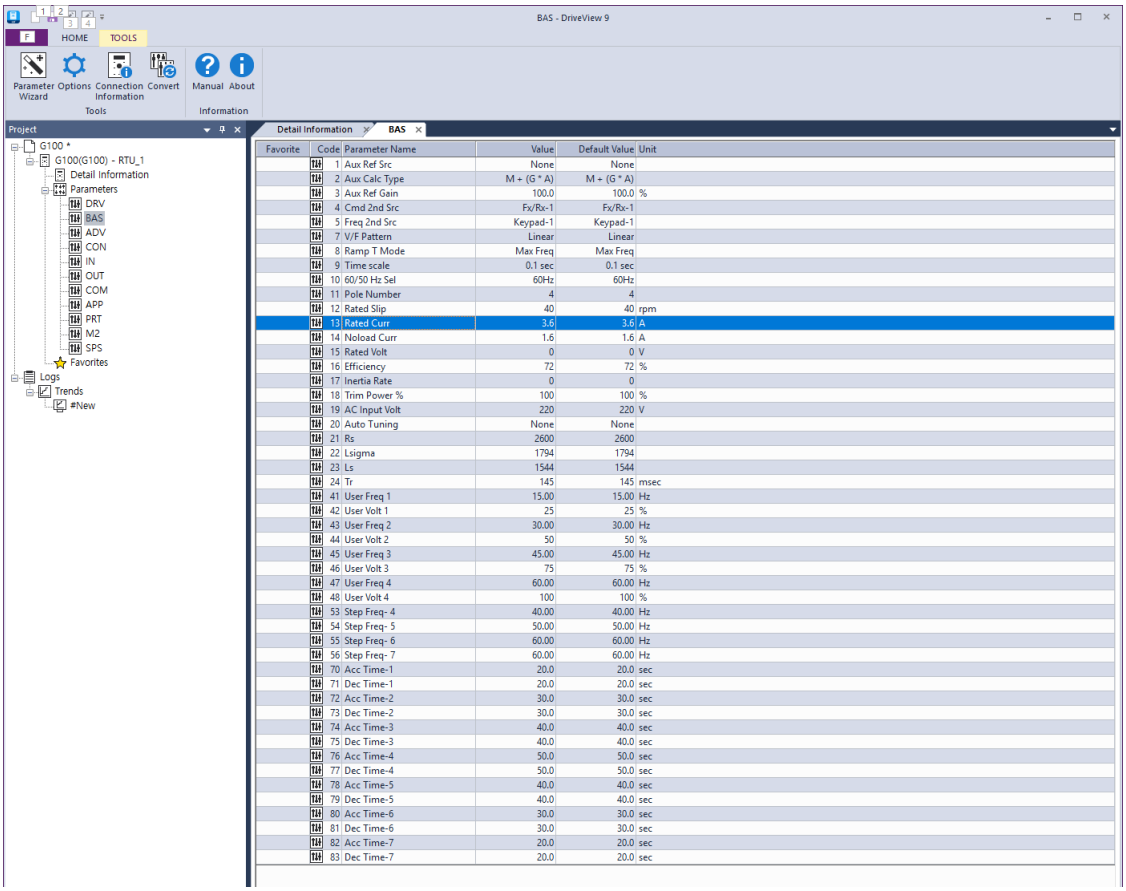

Favorite	Code	Parameter Name	Value	Default Value	Unit
	1	Aux Ref Src	None	None	
	2	Aux Calc Type	M + (G * A)	M + (G * A)	
	3	Aux Ref Gain	100.0	100.0	%
	4	Cmd 2nd Src	Fx/Rx-1	Fx/Rx-1	
	5	Freq 2nd Src	Keypad-1	Keypad-1	
	7	V/F Pattern	Linear	Linear	
	8	Ramp T Mode	Max Freq	Max Freq	
	9	Time scale	0.1 sec	0.1 sec	
	10	60/50 Hz Sel	60Hz	60Hz	
	11	Pole Number	4	4	
	12	Rated Slip	40	40	rpm
	13	Rated Curr	3.6	3.6	A
	14	Noload Curr	1.6	1.6	A
	15	Rated Volt	0	0	V
	16	Efficiency	72	72	%
	17	Inertia Rate	0	0	
	18	Trim Power %	100	100	%
	19	AC Input Volt	220	220	V
	20	Auto Tuning	None	None	
	21	Rs	2600	2600	
	22	Lsigma	1794	1794	
	23	Ls	1544	1544	
	24	Tr	145	145	msec
	41	User Freq 1	15.00	15.00	Hz
	42	User Volt 1	25	25	%
	43	User Freq 2	30.00	30.00	Hz
	44	User Volt 2	50	50	%
	45	User Freq 3	45.00	45.00	Hz
	46	User Volt 3	75	75	%
	47	User Freq 4	60.00	60.00	Hz
	48	User Volt 4	100	100	%
	53	Step Freq- 4	40.00	40.00	Hz
	54	Step Freq- 5	50.00	50.00	Hz
	55	Step Freq- 6	60.00	60.00	Hz
	56	Step Freq- 7	60.00	60.00	Hz
	70	Acc Time-1	20.0	20.0	sec
	71	Dec Time-1	20.0	20.0	sec
	72	Acc Time-2	30.0	30.0	sec
	73	Dec Time-2	30.0	30.0	sec
	74	Acc Time-3	40.0	40.0	sec
	75	Dec Time-3	40.0	40.0	sec
	76	Acc Time-4	50.0	50.0	sec
	77	Dec Time-4	50.0	50.0	sec
	78	Acc Time-5	40.0	40.0	sec
	79	Dec Time-5	40.0	40.0	sec
	80	Acc Time-6	30.0	30.0	sec
	81	Dec Time-6	30.0	30.0	sec
	82	Acc Time-7	20.0	20.0	sec
	83	Dec Time-7	20.0	20.0	sec

In DriveView9, you can read/write individual parameters, groups, and all parameters. In the case of the frequently used parameters, you can add to favorites to manage them separately. For more details, see DriveView9 user's manual.

Detailed Information

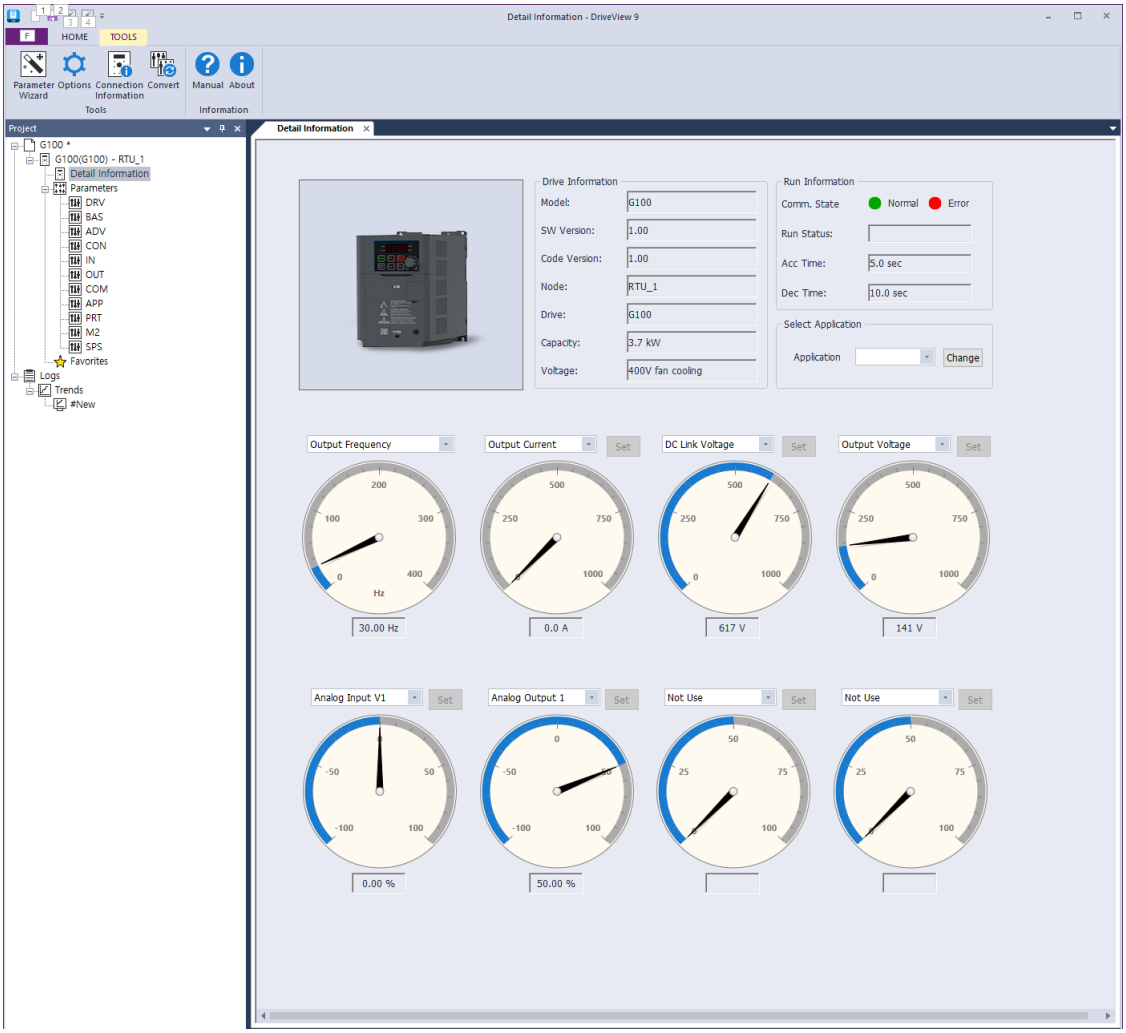

On the DriveView9 Detailed Information screen, you can see the drive information and the monitoring parameters. One output gauge and seven optional gauges are provided. On the output gauge, you can monitor the output frequency/speed. On the optional gauges, the user can select the items that can be monitored, such as the output voltage, output current, or analog input, to be monitored in the form of a gauge. For more details, see DriveView9's user manual.

Trends Feature

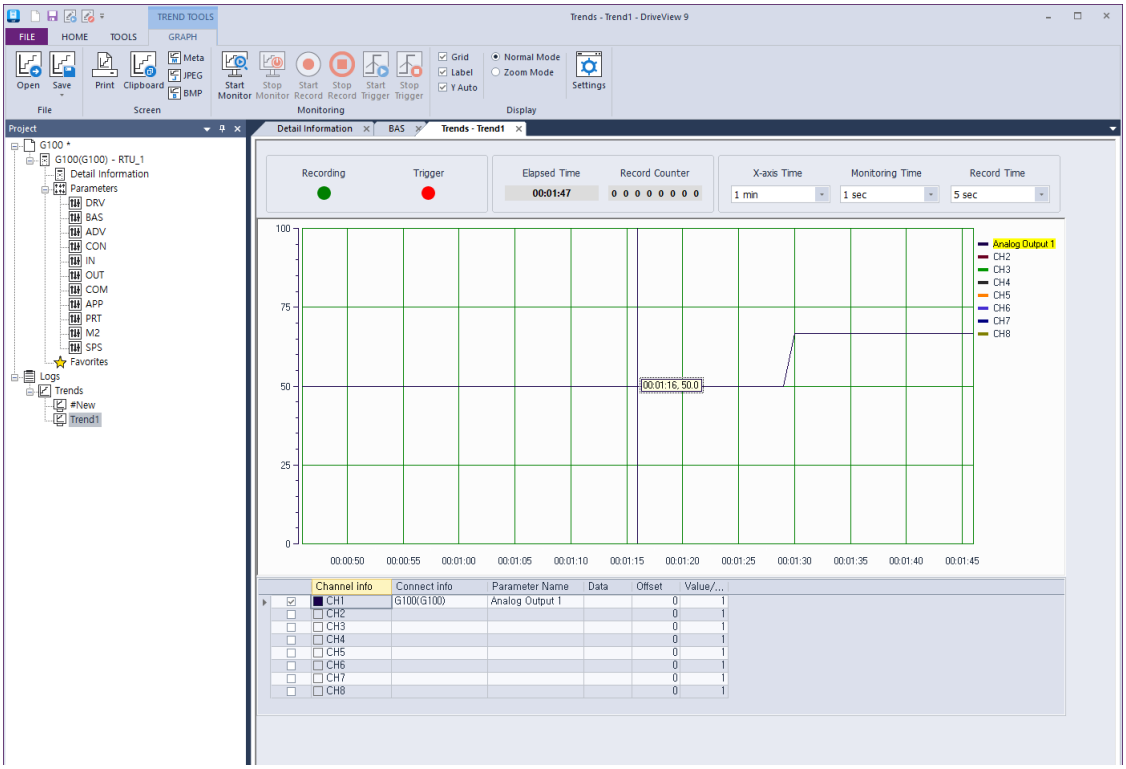

On the Trends screen of DriveView9, you can monitor the parameters in the graph form. Monitoring graphs provide 8 channels. Trends provide monitoring, recording, and trigger observation features. For more details, see DriveView9 user's manual.

7.5 Compatible Common Area Parameter

The following are common area parameters compatible with M100, S100, H100, IS7 and S300.

Comm. Address	Parameter	Scale	Unit	R/W	Assigned Content by Bit	
0h0000	Inverter model	-	-	R	16: G100	
0h0001	Inverter capacity	-	-	R	0: 0.75kW, 1: 1.5kW, 2: 2.2kW, 4: 5.5kW, 5: 7.5kW, 6: 11kW, 7: 15kW, 8: 18.5kW, 9: 22kW 256 : 0.4kW, 259: 4.0kW	
0h0002	Inverter input voltage	-	-	R	0: 200 V level, 1: 400 V level	
0h0003	Version	-	-	R	(E.g.) 0h0100: Version 1.00	
					(E.g.) 0h0101: Version 1.01	
0h0004	Reserved	-	-	R/W	-	
0h0005	Target frequency	0.01	Hz	R/W	-	
0h0006	Operation command (option)	-	-	R	B15	Reserved
					B14	0: Keypad Freq 1: Keypad Torq 2-16 Terminal block multi-step speed 17: Up, 18: Down 19: STEADY 22: V1, 23: V2,24: V0, 25: I2 26: Reserved 27: Built-in 485 28: Communication option 30: JOG, 31: PID
					B13	
					B12	
					B11	
					B10	
					B9	
					B8	0: Keypad 1: FX/RX-1 2: FX/RX-2 3: Built-in 485 4: Communication option
					B7	
					B6	
				R/W	B5	Reserved
					B4	Free-run stop
					B3	Trip Reset
					B2	Reverse operation (R)
					B1	Forward operation (F)
					B0	Stop (S)
0h0007	Acceleration time	0.1	sec	R/W	-	
0h0008	Deceleration time	0.1	sec	R/W	-	

Comm. Address	Parameter	Scale	Unit	R/W	Assigned Content by Bit	
0h0009	Output current	0.1	A	R	-	
0h000A	Output frequency	0.01	Hz	R	-	
0h000B	Output voltage	1	V	R	-	
0h000C	DC link voltage	1	V	R	-	
0h000D	Output power	0.1	kW	R	-	
0h000E	Operation status	-	-	-	B15	Reserved
					B14	1: Frequency command source by communication (built-in, option)
					B13	1: Operation command source by communication (built-in, option)
					B12	Reverse operation command
					B11	Forward operation command
					B10	Brake release signal
					B9	Jog mode
					B8	Drive stopping.
					B7	DC Braking
					B6	Speed reached
					B5	Decelerating
					B4	Accelerating
					B3	Fault Trip - operates according to OU.30 setting
					B2	Operating in reverse direction
					B1	Operating in forward direction
					B0	Stopped
0h000F	Fault trip information	-	-	R	B15	Reserved
					B14	Reserved
					B13	Reserved
					B12	Reserved
					B11	Reserved
					B10	H/W-Diag
					B9	Reserved
					B8	Reserved
					B7	Reserved
					B6	Reserved
					B5	Reserved
					B4	Reserved

Comm. Address	Parameter	Scale	Unit	R/W	Assigned Content by Bit	
					B3	Level Type trip
					B2	Reserved
					B1	Reserved
					B0	Latch Type trip
0h0010	Input terminal information	-	-	R	B15–B8	Reserved
					B7	P8
					B6	P7
					B5	P6
					B4	P5
					B3	P4
					B2	P3
					B1	P2
					B0	P1
0h0011	Output terminal information	-	-	R	B15	Reserved
					B14	Reserved
					B13	Reserved
					B12	Reserved
					B11	Reserved
					B10	Reserved
					B9	Reserved
					B8	Reserved
					B7	Reserved
					B6	Reserved
					B5	Reserved
					B4	Reserved
					B3	Reserved
					B2	Reserved
					B1	Relay 2
					B0	Relay 1
0h0012	V1	0.1	%	R	V1 voltage input	
0h0013	V0	0.1	%	R	Volume voltage input	
0h0014	I2	0.1	%	R	I2 current input	
0h0015	Motor rotation speed	1	Rpm	R	Displays existing motor rotation speed	
0h0016	V2	0.1	%	R	V2 voltage input	
0h0017 - 0h0019	Reserved	-	-	-	-	
0h001 A	Select Hz/rpm	-	-	R	0: Hz, 1: Rpm	
0h001B	Display the number of poles for the selected motor	-	-	R	Display the number of poles for the selected motor	

7.6 G100 Expansion Common Area Parameter

7.6.1 Monitoring Area Parameter (Read Only)

Comm. Address	Parameter	Scale	Unit	Assigned Content by Bit	
0h0300	Inverter model	-	-	16: G100	
0h0301	Inverter capacity	-	-	0.4kW : 1900h, 0.75kW: 3200h 1.5kW: 4015h, 2.2kW: 4022h 4.0kW: 4040h 5.5kW: 4055h, 7.5kW: 4075h 11kW: 40B0h, 15kW: 40F0h 18.5kW: 4125h, 22kW: 4160h	
0h0302	Inverter input voltage / Power(Single phase, 3-phase) / Cooling method	-	-	100 V single phase self cooling: 0120h 200 V 3-phase forced cooling: 0231h	
				100 V single phase forced cooling: 0121h 400 V single phase self cooling: 0420h	
				200 V single phase self cooling: 0220h 400 V 3-phase self cooling: 0430h	
				200 V 3-phase self cooling: 0230h 400 V single phase forced cooling: 0421h	
				200 V single phase forced cooling: 0221h 400 V 3-phase forced cooling: 0431h	
0h0303	Inverter S/W version	-	-	(E.g.) 0h0100: Version 1.00	
				(E.g.) 0h0101: Version 1.01	
0h0304	Reserved	-	-	-	
0h0305	Inverter operation state	-	-	B15	0: Normal state 4: Warning occurred 8: Fault occurred (operates according to Pr.30 setting)
				B14	
				B13	
				B12	
				B11	-
				B8	
				B7	1: Speed searching 2: Accelerating 3: At constant speed 4: Decelerating 5: Decelerating to stop
				B6	
				B5	

Comm. Address	Parameter	Scale	Unit	Assigned Content by Bit	
				B4	6: H/W OCS 7: S/W OCS 8: Dwell operating
				B3 B2 B1 B0	0: Stopped 1: Operating in forward direction 2: Operating in reverse direction 3: DC operating (0 speed control)
0h0306	Inverter operation, frequency command source	-	-	B15 B14 B13 B12 B11 B10 B9 B8	Operation command source 0: Keypad 1: Communication option 2: - 3: Built-in 485 4: Terminal block
				B7 B6 B5 B4 B3 B2 B1 B0	Frequency command source 0: Keypad speed 1: Keypad torque 2–4: Up/Down operation speed 5: V1, 6: V2, 7: V0, 8: I2 9: - 10: Built-in 485 11: Communication option 12: - 13: Jog, 14: PID 25–39: Multi-step speed frequency
0h0307	Safety A Terminal	-	-	0: SA-SC shorted 1: SA-SC open	
0h0308	Safety B Terminal	-	-	0: SB-SC shorted 1: SB-SC open	
0h0309 –0h30F	Reserved	-	-	-	
0h0310	Output current	0.1	A	-	
0h0311	Output frequency	0.01	Hz	-	
0h0312	Output rpm	0	Rpm	-	
0h0313	Motor feedback speed	0	Rpm	-32768Rpm–32767Rpm(directional)	
0h0314	Output voltage	1	V	-	
0h0315	DC link voltage	1	V	-	
0h0316	Output power	0.1	kW	-	
0h0317	Output torque	0.1	%	-	

Comm. Address	Parameter	Scale	Unit	Assigned Content by Bit	
0h0318	PID reference	0.1	%	-	
0h0319	PID feedback	0.1	%	-	
0h031A	Display the number of poles for the 1st motor	-	-	Displays the number of poles for the first motor	
0h031B	Display the number of poles for the 2nd motor	-	-	Displays the number of poles for the second motor	
0h031C	Display the number of poles for the selected motor	-	-	Display the number of poles for the selected motor	
0h031D	Select Hz/rpm	-	-	0: Hz, 1: Rpm	
0h031E –0h031F	Reserved	-	-	-	
0h0320	Digital input information	-	-	B15	Reserved
				-	-
				B7	P8 (I/O board)
				B6	P7 (I/O board)
				B5	P6 (I/O board)
				B4	P5 (I/O board)
				B3	P4 (I/O board)
				B2	P3 (I/O board)
				B1	P2 (I/O board)
				B0	P1 (I/O board)
0h0321	Digital output information	-	-	B15	Reserved
				-	Reserved
				B1	Relay 2
				B0	Relay 1
0h0322	Virtual digital input information	-	-	B15	Reserved
				-	Reserved
				B8	Reserved
				B7	Virtual DI 8 (CM.77)
				B6	Virtual DI 7 (CM.76)
				B5	Virtual DI 6 (CM.75)
				B4	Virtual DI 5 (CM.74)
				B3	Virtual DI 4 (CM.73)
				B2	Virtual DI 3 (CM.72)
				B1	Virtual DI 2 (CM.71)
				B0	Virtual DI 1 (CM.70)
0h0323	Display the selected motor	-	-	0: 1st motor/1: 2nd motor	
0h0324	AI1	0.01	%	Analog input V1 (I/O board)	
0h0325	AI2	0.01	%	Analog input V2(I/O board)	
0h0326	AI3	0.01	%	Volume input (I/O board)	
0h0327	AI4	0.01	%	Analog input I2 (I/O board)	
0h0328	AO1	0.01	%	Analog output 1 (I/O board)	

Comm. Address	Parameter	Scale	Unit	Assigned Content by Bit	
0h0329	AO2	0.01	%	Analog output 2 (I/O board)	
0h032A	AO3	0.01	%	Reserved	
0h032B	AO4	0.01	%	Reserved	
0h032C	Reserved	-	-	-	
0h032D	Inverter module temperature	1	℃	-	
0h032E	Inverter power consumption	0.1	kWh	-	
0h032F	Inverter power consumption	1	MWh	-	
0h0330	Latch type trip information - 1	-	-	B15	Fuse Open Trip
				B14	Over Heat Trip
				B13	Arm Short
				B12	External Trip
				B11	Overvoltage Trip
				B10	Overcurrent Trip
				B9	NTC Trip
				B8	Reserved
				B7	Reserved
				B6	In phase open trip
				B5	Out phase open trip
				B4	Ground Fault Trip
				B3	E-Thermal Trip
				B2	Inverter Overload Trip
				B1	Underload Trip
				B0	Overload Trip
0h0331	Latch type trip information - 2	-	-	B15	Reserved
				B14	Pre Over Heat Trip
				B13	Reserved
				B12	Reserved
				B11	Reserved
				B10	Bad option card
				B9	No motor trip
				B8	External brake trip
				B7	Bad contact at basic I/O board
				B6	Pre PID Fail
				B5	Reserved
				B4	Reserved
				B3	FAN Trip
				B2	PTC Trip
				B1	Reserved
				B0	Reserved
0h0332	Level type trip information	-	-	B15	Reserved
				-	-

Comm. Address	Parameter	Scale	Unit	Assigned Content by Bit	
				B8	Reserved
				B7	Reserved
				B6	Reserved
				B5	Reserved
				B4	Reserved
				B3	Keypad Lost Command
				B2	Lost Command
				B1	Low Voltage Trip
				B0	BX
0h0333	H/W Diagnosis Trip information	-	-	B15	Reserved
				-	Reserved
				B6	Reserved
				B5	QueueFull
				B4	Reserved
				B3	Watchdog-2 error
				B2	Watchdog-1 error
				B1	EEPROM error
				B0	ADC error
0h0334	Warning information	-	-	B15	Pre OverHeat
				B14	Parameter Write Fail
				B12	Fire Mode
				-	Reserved
				B10	Reserved
				B9	Auto Tuning failed
				B8	Keypad lost
				B7	Encoder disconnection
				B6	Wrong installation of encoder
				B5	DB
				B4	FAN running
				B3	Lost command
				B2	Inverter Overload
				B1	Underload
				B0	Overload
0h0335	Latch type trip information - 3	-	-	B3	Under Torque Detection 2
				B2	Over Torque Detection 2
				B1	Under Torque Detection 1
				B0	Over Torque Detection 1
0h0336	Warning information 2	-	-	B15	Reserved
				~	Reserved
				B6	Reserved

Comm. Address	Parameter	Scale	Unit	Assigned Content by Bit	
				B5	PTC
				B4	PID Sleep
				B3	Under Torque Detection2
				B2	Over Torque Detection2
				B1	Under Torque Detection1
				B0	Over Torque Detection 1
0h0337–0h033F	Reserved	-	-	-	
0h0340	On Time date	0	Day	Total number of days the inverter has been powered on	
0h0341	On Time minute	0	Min	Total number of minutes excluding the total number of On Time days	
0h0342	Run Time date	0	Day	Total number of days the inverter has driven the motor	
0h0343	Run Time minute	0	Min	Total number of minutes excluding the total number of Run Time days	
0h0344	Fan Time date	0	Day	Total number of days the heat sink fan has been running	
0h0345	Fan Time minute	0	Min	Total number of minutes excluding the total number of Fan Time days	
0h0346 –0h0348	Reserved	-	-	-	
0h0349	Reserved	-	-	-	
0h034A	Option 1	-	-	0: None, 3: Profibus, 9: CANopen, 18: RAPIEnet+	
0h034B	Reserved	-	-	-	
0h034C	Reserved	-	-	-	

7.6.2 Control Area Parameter (Read/ Write)

Comm. Address	Parameter	Scale	Unit	Assigned Content by Bit	
0h0380	Frequency command	0.01	Hz	Command frequency setting	
0h0381	RPM command	1	Rpm	Command rpm setting	
0h0382	Operation command	-	-	B7	Reserved
				B6	Reserved
				B5	Reserved
				B4	Reserved
				B3	0 → 1: Free-run stop
				B2	0 → 1: Trip reset
				B1	0: Reverse direction command,

Comm. Address	Parameter	Scale	Unit	Assigned Content by Bit	
					1: Forward direction command
				B0	0: Stop command, 1: Run command
				Example: Forward operation command: 0003h, Reverse operation command: 0001h	
0h0383	Acceleration time	0.1	sec	Acceleration time setting	
0h0384	Deceleration time	0.1	sec	Deceleration time setting	
0h0385	Virtual digital input control (0: Off, 1: On)	-	-	B15	Reserved
				-	Reserved
				B8	Reserved
				B7	Virtual DI 8 (CM.77)
				B6	Virtual DI 7 (CM.76)
				B5	Virtual DI 6 (CM.75)
				B4	Virtual DI 5 (CM.74)
				B3	Virtual DI 4 (CM.73)
				B2	Virtual DI 3 (CM.72)
				B1	Virtual DI 2 (CM.71)
				B0	Virtual DI 1 (CM.70)
0h0386	Digital output control (0: Off, 1: On)	-	-	B15	Reserved
				B14	Reserved
				B13	Reserved
				B12	Reserved
				B11	Reserved
				B10	Reserved
				B9	Reserved
				B8	Reserved
				B7	Reserved
				B6	Reserved
				B5	Reserved
				B4	Reserved
				B3	Reserved
				B2	Reserved
				B1	Relay 2(G100), Q1(G100C)
				B0	Relay 1 (0.4–7.5 kW, OU.31: None)
0h0387	Reserved	-	-	Reserved	
0h0388	PID reference	0.1	%	PID reference command	
0h0389	PID feedback value	0.1	%	PID feedback value	
0h038A	Motor rated current	0.1	A	-	
0h038B	Motor rated voltage	1	V	-	
0h038C–0h038F	Reserved	-	-	Reserved	
0h0390	Torque Ref	0.1	%	Torque command	

Comm. Address	Parameter	Scale	Unit	Assigned Content by Bit
0h0391	Fwd Pos Torque Limit	0.1	%	Forward motoring torque limit
0h0392	Fwd Neg Torque Limit	0.1	%	Positive-direction regeneration torque limit
0h0393	Rev Pos Torque Limit	0.1	%	Reverse motoring torque limit
0h0394	Rev Neg Torque Limit	0.1	%	Negative-direction regeneration torque limit
0h0395	Torque Bias	0.1	%	Torque bias

Note

A frequency set via communication using the common area frequency address (0h0380, 0h0005) is not saved even when used with the parameter save function. To save a changed frequency to use after a power cycle, follow these steps:

1. Set a frequency reference after setting the frequency reference source to 0 (Keypad-1).
2. Set the frequency via communication into the parameter area frequency address (0h1D00).

7.6.3 Memory Control Area Parameter (Read and Write)

Comm. Address	Parameter	Scale	Unit	Changeable During Operation	Function
0h03E0	Save parameters	-	-	X	0: No, 1: Yes
0h03E1	Monitor mode initialization	-	-	O	0: No, 1: Yes
0h03E2	Parameter initialization	-	-	X	0: No, 1: All Grp, 2: Drv Grp 3: bA Grp, 4: Ad Grp, 5: Cn Grp 6: In Grp, 7: OU Grp, 8: CM Grp 9: AP Grp, 12: Pr Grp, 13: M2 Grp, 14: Operation group Setting is prohibited during fault trip interruptions.
0h03E3	Changed parameter display	-	-	O	0: No, 1: Yes
0h03E4	Reserved	-	-	-	Reserved
0h03E5	Delete all fault history	-	-	O	0: No, 1: Yes
0h03E6	Delete user-registered codes	-	-	O	0: No, 1: Yes

Comm. Address	Parameter	Scale	Unit	Changeable During Operation	Function
0h03E7	Hide parameter mode	0	Hex	O	Write: 0–9999 Read: 0: Unlock, 1: Lock
0h03E8	Lock parameter mode	0	Hex	O	Write: 0–9999 Read: 0: Unlock, 1: Lock
0h03E9	Reserved	-	-	-	Reserved
0h03EA	Initializing power consumption	-	-	O	0: No, 1: Yes
0h03EB	Initialize inverter operation accumulative time	-	-	O	0: No, 1: Yes
0h03EC	Initialize cooling fan accumulated operation time	-	-	O	0: No, 1: Yes

Note

- When setting parameters in the inverter memory control area, the values are reflected to the inverter operation and saved. Parameters set in other areas via communication are reflected to the inverter operation, but are not saved. All set values are cleared following an inverter power cycle and revert back to its previous values.
  Therefore, make sure to save the parameter after setting the parameter of a different area as communication and before turning off the inverter power. But it is not necessary to save the parameter at the inverter memory control area and the value will be saved to the inverter immediately once the setup is complete.
- Define the parameter carefully. After setting a parameter to 0 via communication, set it to another value. If a parameter has been set to a value other than 0 and a non-zero value is entered again, an error message is returned. The previously-set value can be identified by reading the parameter when operating the inverter via communication.
- The addresses 0h03E7 and 0h03E8 are parameters for entering the password. When the password is entered, the condition will change from Lock to Unlock, and vice versa. When the same parameter value is entered continuously, the parameter is executed just once. Therefore, if the same value is entered again, change it to another value first and then re-enter the previous value.

  For example, if you want to enter 244 twice, enter it in the following order: 244 → 0 → 244.

Caution

It may take longer to set the parameter values in the inverter memory control area because all data is saved to the inverter. Be careful as communication may be lost during parameter setup if parameter setup is continues for an extended period of time.

8 Table of Functions

This chapter lists all the function settings for G100 series inverter. Set the parameters required according to the following references. If a set value input is out of range, the following messages will be displayed on the keyboard. In these cases, the inverter will not operate with the [ENT] key.

- Set value not allocated: **rd**
- Set value repetition (multi-function input, PID reference, PID feedback related): **OL**
- Set value not allowed (optional value): **no**

8.1 Operation Group

SL: Sensorless vector control (dr.09), Property: Write-enabled during operation

Code	Comm. Address	Name	Keypad Display	Setting Range	Initial Value	Property*	V/F	SL	Ref.
-	0h1D00	Target frequency	0.00	0–Maximum frequency (Hz)	0.00	O	O	O	p.60
-	0h1D01	Acceleration time	ACC	0.0–600.0 (s)	5.0	O	O	O	p.98
-	0h1D02	Deceleration time	dEC	0.0–600.0 (s)	10.0	O	O	O	p.98
-	0h1D03	Command Source	drv	0 Keypad 1 FX/RX-1 2 FX/RX-2 3 Int 485 4 Fieldbus[1] 5 UserSeqLink[2]	1: FX/RX-1	X	O	O	p.93
-	0h1D04	Frequency reference source	Frq	0 Keypad-1 1 Keypad-2 2 V1 3 V2 4 V0, built-in volume 5 I2 6 Int 485 8 Field Bus[1] 9 UserSeqLink[2]	0: Keypad-1	X	O	O	p.75
-	0h1D05	Multi-step speed frequency 1	St1	0.00–Maximum frequency (Hz)	10.00	O	O	O	p.91

[1] Table of options are provided separately in the option manual.

[2] Displayed when AP.02 is set to 1.

Code	Comm. Address	Name	Keypad Display	Setting Range	Initial Value	Property*	V/F	SL	Ref.
-	0h1D06	Multi-step speed frequency 2	St2	0.00–Maximum frequency (Hz)	20.00	O	O	O	p.91
-	0h1D07	Multi-step speed frequency 3	St3	0.00–Maximum frequency (Hz)	30.00	O	O	O	p.91
-	0h1D08	Output current	CUr	-	-	-	O	O	p.68
-	0h1D09	Motor revolutions per minute	Rpm	-	-	-	O	O	-
-	0h1D0A	Inverter DC voltage	dCL	-	-	-	O	O	p.68
-	0h1D0B	Inverter output voltage	vOL	-	-	-	O	O	p.68
-	0h1D0C	Out of order signal	nOn	-	-	-	O	O	-
-	0h1D0D	Select rotation direction	drC	F Forward direction operation r Reverse run	F	O	O	O	-

8.2 Drive Group (PAR→dr)

In the following table, data shaded in grey will be displayed when the related code has been selected.

SL: Sensorless vector control (dr.09), Property: Write-enabled during operation

Code	Comm. Address	Name	Setting Range	Initial Value	Property*	V/F	SL	Ref.
dr-00	-	Jump Code	1–99	9	O	O	O	p.57
dr-09	0h1109	Control mode	0 V/F 2 Slip Compen 4 IM Sensorless	0: V/F	X	O	O	p.105, p.148, p.159
dr-11	0h110B	Jog Frequency	0.00, Start frequency–Maximum frequency (Hz)	10.00	O	O	O	p.138
dr-12	0h110C	Jog run acceleration time	0.0–600.0 (s)	20.0	O	O	O	p.138

Code	Comm. Address	Name	Setting Range		Initial Value	Property *	V/F	SL	Ref.
dr-13	0h110D	Jog run deceleration time	0.0–600.0 (s)		30.0	O	O	O	p.138
dr-14	0h110E	Motor capacity	0	0.2 kW	Varies by Motor capacity	X	O	O	p.156
			1	0.4 kW					
			2	0.75 kW					
			3	1.1 kW					
			4	1.5 kW					
			5	2.2 kW					
			6	3.0 kW					
			7	3.7 kW					
			8	4.0 kW					
			9	5.5 kW					
			10	7.5 kW					
			11	11.0kW					
			12	15.0kW					
			13	18.5kW					
			14	22.0kW					
			15	30.0kW					
dr-15	0h110F	Torque boost mode	0	Manual	0: Manual	X	O	X	p.109
			1	Advanced Auto					
dr-16	0h1110	Forward Torque boost	0.0–15.0 (%)		2.0	X	O	X	p.109
dr-17	0h1111	Reverse torque boost	0.0–15.0 (%)		2.0	X	O	X	p.109
dr-18	0h1112	Base frequency	30.00–400.00 (Hz) [V/F, Slip Compen] 40.00–120.00 (Hz) [IM Sensorless]		60.00	X	O	O	p.105
dr-19	0h1113	Start frequency	0.01–10.00 (Hz)		0.50	X	O	O	p.105
dr-20	0h1114	Maximum frequency	40.00–400.00 (Hz) [V/F, Slip Compen] 40.00–120.00 (Hz) [IM Sensorless]		60.00	X	O	O	p.116
dr-26[3]	0h111 A	Auto torque boost filter gain	1–1000		2	O	O	X	
dr-27[3]	0h111B	Auto torque boost motoring gain	0.0–300.0[%]		50.0	O	O	X	

[3] Appears when dr.15 is 1 (automatic torque boost).

Code	Comm. Address	Name	Setting Range		Initial Value	Property *	V/F	SL	Ref.
dr-28[3]	0h111C	Auto torque boost regeneration gain	0.0–300.0[%]		50.0	O	O	X	
dr-80	0h1150	Select ranges at power input	Select ranges inverter displays at power input		0: Operation frequency	O	O	O	-
			0	Operation frequency					
			1	Acceleration time					
			2	Deceleration time					
			3	Command Source					
			4	Frequency reference source					
			5	Multi-step speed frequency 1					
			6	Multi-step speed frequency 2					
			7	Multi-step speed frequency 3					
			8	Output current					
			9	Motor RPM					
			10	Inverter DC voltage					
			11	User select signal (dr.81)					
			12	Currently out of order					
			13	Select run direction					
			14	Output current 2					
			15	Motor RPM 2					
			16	Inverter DC voltage 2					
			17	User select signal 2 (dr.81)					
dr-81	0h1151	Select monitor code	Monitors user selected code		0: Output voltage	O	O	O	-
			0	Output voltage (V)					
			1	Output power (kW)					

Code	Comm. Address	Name	Setting Range		Initial Value	Property *	V/F	SL	Ref.
			2	Torque(kgf · m)					
			3	PID feedback monitor					
dr-87	0h1157	Datafile version	-		-	O	O	-	-
dr-89	0h1159	Display changed parameter	0	View All	0: View All	O	O	O	p.184
			1	View Changed					
dr-91	0h115B	Smart copy	0	None	0: None	X	O	O	p.389
			1	SmartDownload					
			3	SmartUpLoad					
			4	RemoteUpLoad					
			5	RemoteDownload					
dr-92	-	Parameter save	0	None	0:None	X	O	O	-
			1	Parameter Save					
dr-93	0h115D	Parameter initialization	0	No	0: No	X	O	O	p.182
			1	All Grp					
			2	dr Grp					
			3	bA Grp					
			4	Ad Grp					
			5	Cn Grp					
			6	In Grp					
			7	OU Grp					
			8	CM Grp					
			9	AP Grp					
			12	Pr Grp					
			13	M2 Grp					
			14	Operation Grp					
dr-94	0h115E	Password registration	0–9999		-	O	O	O	p.183
dr-95	0h115F	Parameter lock settings	0–9999		-	O	O	O	p.183
dr-97	0h1161	Software version	-		-	-	O	O	-
dr-98	0h1162	Display I/O board version	-		-	-	O	O	-

8.3 Basic Function Group (PAR→bA)

In the following table, data shaded in grey will be displayed when the related code has been selected.

SL: Sensorless vector control (dr.09), Property: Write-enabled during operation

Code	Comm. Address	Name	Setting Range		Initial Value	Property*	V/F	SL	Ref.
bA-00	-	Jump Code	1–99		20	O	O	O	p.57
bA-01	0h1201	Auxiliary reference source	0	None	0: None	X	O	O	p.134
			1	V1					
			2	V2					
			3	V0					
			4	I2					
bA-02[4]	0h1202	Auxiliary command calculation type	0	M+(G*A)	0: M+(GA)	X	O	O	p.134
			1	Mx (G*A)					
			2	M/(G*A)					
			3	M+[M*(G*A)]					
			4	M+G*2 (A–50%)					
			5	Mx[G*2 (A–50%)					
			6	M/[G*2 (A–50%)]					
			7	M+M*G*2 (A–50%)					
bA-03[4]	0h1203	Auxiliary frequency reference gain	-200.0–200.0 (%)		100.0	O	O	O	p.134
bA-04	0h1204	2nd command source	0	Keypad	1: FX/RX-1	X	O	O	p.119
			1	FX/RX-1					
			2	FX/RX-2					
			3	Int 485					
			4	FieldBus[5]					
			5	UserSeqLink					
bA-05	0h1205	2nd frequency source	0	Keypad-1	0: Keypad-1	O	O	O	p.119
			1	Keypad-2					
			2	V1					
			3	V2					
			4	V0					
			5	I2					
			6	Int 485					
			8	FieldBus[5]					
			9	UserSeqLink					

[4] Displayed if bA.01 is not set to 0 (None).

[5] Refer to the optional items' manuals provided separately for the optional items.

Code	Comm. Address	Name	Setting Range		Initial Value	Property*	V/F	SL	Ref.
bA-07	0h1207	V/F pattern	0	Linear	0: Linear	X	O	X	p.105
			1	Square					
			2	User V/F					
			3	Square 2					
bA-08	0h1208	Acc/Dec reference frequency	0	Max Freq	0: Max Freq	X	O	O	p.98
			1	Delta Freq					
bA-09	0h1209	Time scale setting	0	0.01 sec	1: 0.1 sec	X	O	O	p.98
			1	0.1 sec					
			2	1 sec					
bA-10	0h120A	input power frequency	0	60 Hz	0: 60 Hz	X	O	O	p.181
			1	50 Hz					
bA-11	0h120B	Number of motor poles	2–48		Dependent on motor setting	X	O	O	p.148
bA-12	0h120C	Rated slip speed	0–3000 (Rpm)			X	O	O	p.148
bA-13	0h120D	Motor rated current	1.0–1000.0 (A)			X	O	O	p.148
bA-14	0h120E	Motor noload current	0.0–1000.0 (A)			X	O	O	p.148
bA-15	0h120F	Motor rated voltage	0, 100–480 (V)		0	X	O	O	p.110
bA-16	0h1210	Motor efficiency	64–100 (%)		Dependent on motor setting	X	O	O	p.148
bA-17	0h1211	Load inertia rate	0–8		0	X	O	O	p.148
bA-18	0h1212	Trim power display	70–130 (%)		100%	O	O	O	-
bA-19	0h1213	Input power voltage	170–480 V		220/380 V	O	O	O	p.181
bA-20	0h1214	Auto tuning	0	None	0: None	X	X	O	p.156
			1	All (Rotation type)					
			2	All (Static type)					
			3	Rs+Lsigma (Rotation type)					
			6	Tr (Static type)					
bA-21	-	Stator resistance	Dependent on motor setting		Dependen t on motor	X	X	O	p.156

Code	Comm. Address	Name	Setting Range	Initial Value	Property*	V/F	SL	Ref.
bA-22	-	Leakage inductance		setting	X	X	O	p.156
bA-23	-	Stator inductance			X	X	O	p.156
bA-24[6]	-	Rotor time constant	25–5000 (ms)	-	X	X	O	p.156
bA-41[7]	0h1229	User Frequency 1	0.00–Maximum frequency (Hz)	15.00	X	O	X	p.107
bA-42[7]	0h122A	User Voltage 1	0–100 (%)	25	X	O	X	p.107
bA-43[7]	0h122B	User Frequency 2	0.00–Maximum frequency (Hz)	30.00	X	O	X	p.107
bA-44[7]	0h122C	User Voltage 2	0–100 (%)	50	X	O	X	p.107
bA-45[7]	0h122D	User Frequency 3	0.00–Maximum frequency (Hz)	45.00	X	O	X	p.107
bA-46[7]	0h122E	User Voltage 3	0–100 (%)	75	X	O	X	p.107
bA-47[7]	0h122F	User Frequency 4	0.00–Maximum frequency (Hz)	Maximum frequency	X	O	X	p.107
bA-48[7]	0h1230	User Voltage 4	0–100 (%)	100	X	O	X	p.107
bA-53[8]	0h1235	Multi-step speed frequency 4	0.00–Maximum frequency (Hz)	40.00	O	O	O	p.91
bA-54[8]	0h1236	Multi-step speed frequency 5	0.00–Maximum frequency (Hz)	50.00	O	O	O	p.91
bA-55[8]	0h1237	Multi-step speed frequency 6	0.00–Maximum frequency (Hz)	Maximum frequency	O	O	O	p.91
bA-56[8]	0h1238	Multi-step speed frequency 7	0.00–Maximum frequency (Hz)	Maximum frequency	O	O	O	p.91
bA-70	0h1246	Multi-step	0.0–600.0 (s)	20.0	O	O	O	p.100

[6] Displayed when dr.09 is set to 4 (IM Sensorless).

[7] Displayed if either bA.07 or M2.25 is set to 2 (User V/F).

[8] Displayed if one of In.65-72 is set to Speed–L/M/H.

Code	Comm. Address	Name	Setting Range	Initial Value	Property*	V/F	SL	Ref.
		acceleration time 1						
bA-71	0h1247	Multi-step deceleration time 1	0.0–600.0 (s)	20.0	O	O	O	p.100
bA-72[9]	0h1248	Multi-step acceleration time 2	0.0–600.0 (s)	30.0	O	O	O	p.100
bA-73[9]	0h1249	Multi-step deceleration time 2	0.0–600.0 (s)	30.0	O	O	O	p.100
bA-74[9]	0h124A	Multi-step acceleration time 3	0.0–600.0 (s)	40.0	O	O	O	p.100
bA-75[9]	0h124B	Multi-step deceleration time 3	0.0–600.0 (s)	40.0	O	O	O	p.100
bA-76[9]	0h124C	Multi-step acceleration time 4	0.0–600.0 (s)	50.0	O	O	O	p.100
bA-77[9]	0h124D	Multi-step deceleration time 4	0.0–600.0 (s)	50.0	O	O	O	p.100
bA-78[9]	0h124E	Multi-step acceleration time 5	0.0–600.0 (s)	40.0	O	O	O	p.100
bA-79[9]	0h124F	Multi-step deceleration time 5	0.0–600.0 (s)	40.0	O	O	O	p.100
bA-80[9]	0h1250	Multi-step acceleration time 6	0.0–600.0 (s)	30.0	O	O	O	p.100
bA-81[9]	0h1251	Multi-step deceleration time 6	0.0–600.0 (s)	30.0	O	O	O	p.100
bA-82[9]	0h1252	Multi-step acceleration time 7	0.0–600.0 (s)	20.0	O	O	O	p.100
bA-83[9]	0h1253	Multi-step deceleration time 7	0.0–600.0 (s)	20.0	O	O	O	p.100

[9] Displayed one of In.65-72 is set to Xcel–L/M/H.

8.4 Expanded Function Group (PAR→Ad)

In the following table, data shaded in grey will be displayed when the related code has been selected.

SL: Sensorless vector control (dr.09), Property: Write-enabled during operation

Code	Comm. Address	Name	Setting Range		Initial Value	Property *	V/F	SL	Ref.
Ad-00	-	Jump Code	1–99		24	O	O	O	p.57
Ad-01	0h1301	Acceleration pattern	0	Linear	0: Linear	X	O	O	p.103
Ad-02	0h1302	Deceleration pattern	1	S-curve		X	O	O	p.103
Ad-03[10]	0h1303	S-curve acceleration start point gradient	1–100 (%)		40	X	O	O	p.103
Ad-04[10]	0h1304	S-curve acceleration end point gradient	1–100 (%)		40	X	O	O	p.103
Ad-05[11]	0h1305	S-curve deceleration start point gradient	1–100 (%)		40	X	O	O	p.103
Ad-06[11]	0h1306	S-curve deceleration end point gradient	1–100 (%)		40	X	O	O	p.103
Ad-07	0h1307	Start Mode	0	Acc	0: Acc	X	O	O	p.111
			1	Dc-Start					
Ad-08	0h1308	Stop Mode	0	Dec	0: Dec	X	O	O	p.113
			1	Dc-Brake					
			2	Free-Run					
			4	Power Braking					
Ad-09	0h1309	Run prevention options	0	None	0: None	X	O	O	p.95
			1	Forward Prev					
			2	Reverse Prev					

[10] Displayed when Ad. 01 is set to 1 (S-curve).

[11] Displayed when the Ad. 02 code is set to 1 (S-curve).

Code	Comm. Address	Name	Setting Range	Initial Value	Property *	V/F	SL	Ref.
Ad-10	0h130A	Starting with power on	0 No 1 Yes	0: No	O	O	O	p.96
Ad-12[12]	0h130C	Start DC braking time	0.00–60.00 (s)	0.00	X	O	X	p.111
Ad-13	0h130D	Amount of applied DC	0-Rated Current of Inverter/Rated Current of Motor x 100 (%)	50	X	O	X	p.111
Ad-14[13]	0h130E	Output blocking time before DC braking	0.00–60.00 (s)	0.10	X	O	O	p.113
Ad-15[13]	0h130F	DC braking time	0.00–60.00 (s)	1.00	X	O	O	p.113
Ad-16[13]	0h1310	DC braking rate	0-Rated Current of Inverter/Rated Current of Motor x 100 (%)	50	X	O	O	p.113
Ad-17[13]	0h1311	DC braking frequency	Start frequency–60 Hz	5.00	X	O	O	p.113
Ad-20	0h1314	Dwell frequency on acceleration	Start frequency–Maximum frequency(Hz)	5.00	X	O	O	p.146
Ad-21	0h1315	Dwell operation time on acceleration	0.0–60.0 (s)	0.0	X	O	O	p.146
Ad-22	0h1316	Dwell frequency during deceleration	Start frequency–Maximum frequency(Hz)	5.00	X	O	O	p.146
Ad-23	0h1317	Operation time during deceleration	0.0–60.0 (s)	0.0	X	O	O	p.146

[12] Displayed when Ad. 07 is set to 1 (DC-Start).

[13] Displayed when Ad. 08 is set to 1 (DC-Brake).

Code	Comm. Address	Name	Setting Range	Initial Value	Property *	V/F	SL	Ref.
Ad-24	0h1318	Frequency limit	0 No 1 Yes	0: No	X	O	O	p.117
Ad-25[14]	0h1319	Frequency lower limit value	0.00–Upper limit frequency(Hz)	0.50	O	O	O	p.117
Ad-26[14]	0h131 A	Frequency upper limit value	Lower limit frequency–Maximum frequency(Hz)	Maximum frequency	X	O	O	p.117
Ad-27	0h131B	Frequency jump	0 No 1 Yes	0: No	X	O	O	p.118
Ad-28[15]	0h131C	Jump frequency lower limit 1	0.00–Jump frequency upper limit1 (Hz)	10.00	O	O	O	p.118
Ad-29[15]	0h131D	Jump frequency upper limit 1	Jump frequency lower limit1–Maximum frequency (Hz)	15.00	O	O	O	p.118
Ad-30[15]	0h131E	Jump frequency lower limit 2	00–Jump frequency upper limit2 (Hz)	20.00	O	O	O	p.118
Ad-31[15]	0h131F	Jump frequency upper limit 2	Jump frequency lower limit2–Maximum frequency (Hz)	25.00	O	O	O	p.118
Ad-32[15]	0h1320	Jump frequency lower limit 3	0.00–Jump frequency upper limit3 (Hz)	30.00	O	O	O	p.118
Ad-33[15]	0h1321	Jump frequency upper limit 3	Jump frequency lower limit3–Maximum frequency (Hz)	35.00	O	O	O	p.118
Ad-41[16]	0h1329	Brake release	0.0–180.0 (%)	50.0	O	O	O	p.185

[14] Displayed when the Ad.24 code is set to 1 (Yes).

[15] Displayed when the Ad.27 code is set to 1 (Yes).

[16] Displayed if either OU.31 or OU.33 is set to 35 (BR Control).

Code	Comm. Address	Name	Setting Range	Initial Value	Property *	V/F	SL	Ref.
		current						
Ad-42[16]	0h132A	Brake release delay time	0.00–10.00 (s)	1.00	X	O	O	p.185
Ad-44[16]	0h132C	Brake release Forward frequency	0.00–Maximum frequency (Hz)	1.00	X	O	O	p.185
Ad-45[16]	0h132D	Brake release Reverse frequency	0.00–Maximum frequency (Hz)	1.00	X	O	O	p.185
Ad-46[16]	0h132E	Brake engage delay time	0.00–10.00 (s)	1.00	X	O	O	p.185
Ad-47[16]	0h132F	Brake engage frequency	0.00–Maximum frequency (Hz)	2.00	X	O	O	p.185
Ad-50	0h1332	Energy saving operation	0 None 1 Manual 2 Auto	0: None	X	O	X	p.170
Ad-51[17]	0h1333	Energy saving amount	0–30 (%)	0	O	O	X	p.170
Ad-60	0h133C	Acc/Dec time transition frequency	0.00–Maximum frequency (Hz)	0.00	X	O	O	p.102
Ad-61	0h133D	Rotation Count speed gain	0.1-6000.0[%]	100.0	O	O	O	-
Ad-64	0h1340	Cooling fan control	0 During Run 1 Always ON 2 Temp Control	0: During Run	O	O	O	p.180
Ad-65	0h1341	Up/down operation frequency save	0 No 1 Yes	0: No	O	O	O	p.140
Ad-66	0h1342	Output contact	0 None 1 V1	0: None	X	O	O	p.187

[17] Displayed if Ad.50 is not set to 0 (None).

Code	Comm. Address	Name	Setting Range		Initial Value	Property *	V/F	SL	Ref.
		On/Off control options	2	V2					
			3	V0					
			4	I2					
Ad-67	0h1343	Output contact On level	Output contact off level–100.00%		90.00	X	O	O	p.187
Ad-68	0h1344	Output contact Off level	-100.00–output contact on level (%)		10.00	X	O	O	p.187
Ad-70	0h1346	Safe operation selection	0	Always Enable	0: Always Enable	X	O	O	p.145
			1	DI Dependent					
Ad-71[18]	0h1347	Safe operation stop options	0	Free-Run	0: Free-Run	X	O	O	p.145
			1	Q-Stop					
			2	Q-Stop Resume					
Ad-72[18]	0h1348	Safe operation deceleration time	0.0–600.0 (s)		5.0	O	O	O	p.145
Ad-74	0h134A	Selection of regeneration evasion function for press	0	No	0: No	X	O	O	p.188
			1	Yes					
Ad-75	0h134B	Voltage level of regeneration evasion motion for press	200 V: 300–400 V		350	X	O	O	p.188
			400 V: 600–800 V		700				
Ad-76[19]	0h134C	Compensation frequency limit of regeneration evasion for press	0.00–10.00 Hz		1.00	X	O	O	p.188
Ad-77[19]	0h134D	Regeneration evasion for	0.0–100.0%		50.0	O	O	O	p.188

[18] Displayed when Ad.70 is set to 1 (DI Dependent).

[19] Displayed when the Ad.74 code is set to 1 (Yes).

Code	Comm. Address	Name	Setting Range	Initial Value	Property *	V/F	SL	Ref.
		press P gain						
Ad-78[19]	0h134E	Regeneration evasion for press I gain	20–30000 (ms)	500	O	O	O	p.188
Ad-79	0h134F	DB Unit turn on voltage level	200 V: Min[20]–400[V] 400 V: Min[20]–800[V]	390[V] 780[V]	X	O	O	-
Ad-80	0h1350	Fire Mode selection	0 None 1 Fire Mode 2 Fire Mode Test	0: None	X	O	O	p.121
Ad-81[21]	0h1351	Fire Mode Operation frequency	Start frequency–Maximum frequency [Hz]	60.00	X	O	O	p.121
Ad-82[21]	0h1352	Fire Mode Run direction	0 Forward 1 Reverse	0: Forward	X	O	O	p.121
Ad-83[21]		Fire Mode operation count	Not configurable	-	-	-	-	p.121
Ad-85	0h1355	Up-down operation mode	0 U/D Normal 1 U/D Step 2 U/D Step+Norm	0:U/D Normal	X	O	O	p.140
Ad-86	0h1356	Up-down step frequency	0.00~ maximum frequency(Hz)	0.00	X	O	O	p.140

[20] Voltage type which DC converted the bA.19 AC input voltage: +20 V (200 Vtype), +40 V (400 V type). 200 V type is limited to 350 V and 400 V type is limited to 600 V.

[21] Displayed if Ad.80 is not set to 0 (None).

8.5 Control Function Group (PAR→Cn)

In the following table, data shaded in grey will be displayed when the related code has been selected.

SL: Sensorless vector control (dr.09), Property: Write-enabled during operation

Code	Comm. Address	Name	Setting Range		Initial Value	Property *	V/F	SL	Ref.
Cn-00	-	Jump Code	1–99		4	O	O	O	p.57
Cn-04	0h1404	Carrier frequency[22]	Heavy Duty	V/F: 1.0–15.0 (kHz) IM: 2.0–15.0 (kHz)	3.0	X	O	O	p.176
			Normal Duty	V/F: 1.0–5.0 (kHz) IM: 2.0–5.0 (kHz)	2.0				p.176
Cn-05	0h1405	Switching mode	0	Normal PWM	0: Normal PWM	X	O	O	p.176
Cn-09	0h1409	Initial excitation time	0.00–60.00 (s)		1.00	X	X	O	p.162
Cn-10	0h140A	Initial excitation amount	100.0–300.0 (%)		100.0	X	X	O	p.162
Cn-11	0h140B	Continued operation duration	0.00–60.00 (s)		0.00	X	X	O	p.162
Cn-20	0h1414	Preventing output current hunting	0	No	0: No	O	O	X	p.204
			1	Yes					
Cn-21	0h1415	Low-speed torque compensation gain	50–300 (%)		Varies by Motor capacity	X	X	O	p.162
Cn-22	0h1416	Output torque compensation gain	50–300 (%)		Varies by Motor capacity	X	X	O	p.162
Cn-23	0h1417	Speed deviation compensation gain	50–300 (%)		Varies by Motor capacity	X	X	O	p.162
Cn-24	0h1418	Main compensation	50–300 (%)		Varies by Motor	X	X	O	p.162

[22] Applicable to 5.5 - 7.5 kW products. Refer to 5.15 for information on all capacities.

Code	Comm. Address	Name	Setting Range		Initial Value	Property *	V/F	SL	Ref.
		of speed deviation			capacity				
Cn-29	0h141D	No load speed deviation compensation gain	0.50–2.00		1.06	O	X	O	p.162
Cn-30	0h141E	Speed response adjustment gain	2.0–10.0		4.0	O	X	O	p.162
Cn-53	0h1435	Torque limit setting method	0	Keypad-1	0: Keypad-1	X	X	O	p.162
			1	Keypad-2					
			2	V1					
			3	V2					
			4	V0					
			5	I2					
			6	Int 485					
			8	FieldBus					
			9	UserSeqLink					
Cn-54[23]	0h1436	Positive-direction reverse torque limit	0.0–300.0 (%)		180	O	X	O	p.162
Cn-55[23]	0h1437	Positive-direction regeneration torque limit	0.0–200.0 (%)		180	O	X	O	p.162
Cn-56[23]	0h1438	Negative-direction regeneration torque limit	0.0–200.0 (%)		180	O	X	O	p.162
Cn-57[23]	0h1439	Negative-direction reverse torque limit	0.0–300.0 (%)		180	O	X	O	p.162
Cn-70	0h 1446	Speed search mode selection	0	Flying Start-1[24]	0: Flying Start-1	X	O	O	p.171
			1	Flying Start-2					
Cn-71	0h1447	Speed search	bit	0000–1111	0000[25]	X	O	O	p.171

[23] Displayed when dr.09 is set to 4 (IM Sensorless). Also, when setting the regenerative avoidance function for the Ad.74 code press, the initial torque limit value is changed to 150%.

[24] Will not be displayed if dr.09 is set to 4 (IM Sensorless).

Code	Comm. Address	Name	Setting Range		Initial Value	Property *	V/F	SL	Ref.
		operation selection	0001	Select the speed search function at acceleration.					
			0010	Initialization after a fault trip					
			0100	Restart after instantaneous power interruption					
			1000	Starting with power-on					
Cn-72[26]	0h1448	Speed search reference current	80–200 (%)		150	O	O	O	p.171
Cn-73[27]	0h1449	Speed search proportional gain	0–9999		Flying Start-1 : 100 Flying Start-2 : 600[28]	O	O	O	p.171
Cn-74[27]	0h144A	Speed search integral gain	0–9999		Flying Start-1 : 200 Flying Start-2 : 1000	O	O	O	p.171
Cn-75[27]	0h144B	Output block time before speed search	0.0–60.0 (s)		1.0	X	O	O	p.171
Cn-76[27]	0h144C	Speed search Estimator gain	50–150 (%)		100	O	O	O	-
Cn-77	0h144D	Energy buffering selection	0	No	0: No	X	O	O	p.166
			1	KEB-1					
			2	KEB-2					

[25] It will be displayed on the keypad as 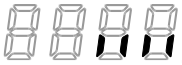 .

[26] Displayed when any of the Cn.71 code bits are set to 1 and Cn70 is set to 0 (Flying Start-1).

[27] Displayed when any of the Cn.71 code bits are set to 1.

[28] The initial value is 1200 when the motor-rated capacity is less than 7.5 kW

Code	Comm. Address	Name	Setting Range		Initial Value	Property *	V/F	SL	Ref.
Cn-78[29]	0h144E	Energy buffering start level	110.0–200.0 (%)		125.0	X	O	O	p.166
Cn-79[29]	0h144F	Energy buffering stop level	Cn78–210.0 (%)		130.0	X	O	O	p.166
Cn-80[29]	0h1450	Energy buffering P gain	0–20000		1000	O	O	O	p.166
Cn-81[29]	0h1451	Energy buffering I gain	1–20000		500	O	O	O	p.166
Cn-82[29]	0h1452	Energy buffering Slip gain	0–2000.0%		30.0	O	O	O	p.166
Cn-83[29]	0h1453	Energy buffering acceleration time	0.0–600.0 (s)		10.0	O	O	O	p.166
Cn-96	0h1460	Suppressing OVT occurrences	0	No	0: No	X	O	X	p.203
			1	Yes					
Cn-97	0h1461	Overcurrent suppression method	0	Standard	0: Standard	X	O	X	p.204
			1	Aggressive					
Cn-98	0h1462	Suppressing output voltage	0	No	1: Yes	O	O	X	
			1	Yes					

8.6 Input Terminal Block Function Group (PAR→In)

In the following table, data shaded in grey will be displayed when the related code has been selected.

SL: Sensorless vector control (dr.09), Property: Write-enabled during operation

Code	Comm. Address	Name	Setting Range	Initial Value	Property*	V/F	SL	Ref.
In-00	-	Jump Code	1–99	65	O	O	O	p.57
In-01	0h1501	Frequency for maximum analog input	Start frequency–Maximum frequency(Hz)	Maximum frequency	O	O	O	p.76

[29] Displayed when Cn.77 is not set to 0 (No).

Code	Comm. Address	Name	Setting Range		Initial Value	Property*	V/F	SL	Ref.
In-02	0h1502	Torque at maximum analog input	0.0–200.0 (%)		100.0	O	X	X	-
In-05	0h1505	V1 input voltage display	-12.00–12.00 (V)		0.00	-	O	O	p.76
In-06	0h1506	V1 input polarity selection	0	Unipolar	0: Unipolar	X	O	O	p.76
			1	Bipolar					
In-07	0h1507	Time constant of V1 input filter	0–10000 (ms)		100	O	O	O	p.76
In-08	0h1508	V1 Minimum input voltage	0.00–10.00 (V)		0.00	O	O	O	p.76
In-09	0h1509	V1 output at Minimum voltage (%)	0.00–100.00 (%)		0.00	O	O	O	p.76
In-10	0h150A	V1 Maximum input voltage	0.00–12.00 (V)		10.00	O	O	O	p.76
In-11	0h150B	V1 output at Maximum voltage (%)	0.00–100.00 (%)		100.00	O	O	O	p.76
In-12[30]	0h150C	V1 Minimum input voltage	-10.00–0.00 (V)		0.00	O	O	O	p.80
In-13[30]	0h150D	V1 output at Minimum voltage (%)	-100.00–0.00 (%)		0.00	O	O	O	p.80
In-14[30]	0h150E	V1 Maximum input voltage	-12.00–0.00 (V)		-10.00	O	O	O	p.80
In-15[30]	0h150F	V1 output at Maximum voltage (%)	-100.00–0.00 (%)		-100.00	O	O	O	p.80
In-16	0h1510	Changing rotation direction of V1	0	No	0: No	O	O	O	p.76
			1	Yes					
In-17	0h1511	V1 quantization level	0.00[31], 0.04–10.00 (%)		0.04	X	O	O	p.76
In-18	0h1512	V2 input voltage display	-12.00~12.00(V)		0.00	-	O	O	p.82
In-19	0h1513	V2 input	0	Unipolar	0: Unipolar	X	O	O	p.82

[30] Displayed when In.06 is set to 1 (Bipolar).

[31] Quantizing is not used when set to 0.

Code	Comm. Address	Name	Setting Range		Initial Value	Property*	V/F	SL	Ref.
		polarity selection	1	Bipolar					
In-20	0h1514	Time constant of V1 input filter	0~10000(ms)		100	O	O	O	p.82
In-21	0h1515	V2 Minimum input voltage	0.00~10.00(V)		100	O	O	O	p.82
In-22	0h1516	V2 output at Minimum voltage (%)	0.00~100.00(%)		0.00	O	O	O	p.82
In-23	0h1517	V2 Maximum input voltage	0.00~12.00(V)		0.00	O	O	O	p.82
In-24	0h1518	V2 output at Maximum voltage (%)	0.00~100.00(%)		10.00	O	O	O	p.82
In-25[32]	0h1519	V2 Minimum input voltage	-10.00~ 0.00(V)		100.00	O	O	O	p.86
In-26[32]	0h151A	V2 output at Minimum voltage (%)	-100.00~0.00(%)		0.00	O	O	O	p.86
In-27[32]	0h151B	V2 output at Maximum voltage	-12.00~ 0.00(V)		-10.00	O	O	O	p.86
In-28[32]	0h151C	V2 output at Maximum voltage (%)	-100.00~0.00(%)		-100.00	O	O	O	p.86
In-29	0h151D	Changing rotation direction of V2	0	No	0: No	O	O	O	p.82
			1	Yes					
In-30	0h151E	V2 quantization level	0.00[31], 0.04~10.00(%)		0.04	X	O	O	p.82
In-35	0h1523	V0 input voltage display	0.00–5.00 (V)		0.00	-	O	O	p.88
In-37	0h1525	Time constant of V0 input filter	0–10000 (ms)		100	O	O	O	p.88
In-38	0h1526	V0 Minimum input voltage	0.00–5.00 (V)		0.00	O	X	O	p.88
In-39	0h1527	V0 output at Minimum voltage (%)	0.00–100.00 (%)		0.00	O	O	O	p.88

[32] Displayed when In.19 code is set to 1 (Bipolar).

Code	Comm. Address	Name	Setting Range		Initial Value	Property*	V/F	SL	Ref.
In-40	0h1528	V0 Maximum input voltage	0.00–5.00 (V)		5.00	O	X	O	p.88
In-41	0h1529	V0 output at Maximum voltage (%)	0.00–100.00 (%)		100.00	O	O	O	p.88
In-46	0h152E	Changing rotation direction of V0	0	No	0: No	O	O	O	p.88
			1	Yes					
In-47	0h152F	V0 quantization level	0.00[31], 0.04–10.00 (%)		0.04	O	O	O	p.88
In-50	0h1532	I2 input voltage display	0–24 (mA)		0.00	-	O	O	p.88
In-52	0h1534	I2 input filter time constant	0–10000 (ms)		100	O	O	O	p.88
In-53	0h1535	I2 minimum input current	0.00–20.00 (mA)		4.00	O	O	O	p.88
In-54	0h1536	I2 output at Minimum current (%)	0.00–100.00 (%)		0.00	O	O	O	p.88
In-55	0h1537	I2 maximum input current	0.00–20.00 (mA)		20.00	O	O	O	p.88
In-56	0h1538	I2 output at Maximum current (%)	0.00–100.00 (%)		100.00	O	O	O	p.88
In-61	0h153D	Changing rotation direction of I2	0	No	0: No	O	O	O	p.88
			1	Yes					
In-62	0h153E	I2 quantization level	0.00[31], 0.04–10.00 (%)		0.04	O	O	O	p.88
In-65	0h1541	P1 terminal function setting	0	None	1: FX	X	O	O	p.93
			1	FX					
In-66	0h1542	P2 terminal function setting	2	RX	2: RX	X	O	O	p.93
			3	RST					p.230
In-67	0h1543	P3 terminal function setting	4	External Trip	5: BX	X	O	O	p.219
			5	BX					p.229
In-68	0h1544	P4 terminal function setting	6	JOG	3: RST	X	O	O	p.138
			7	Speed-L					p.91

Code	Comm. Address	Name	Setting Range		Initial Value	Property*	V/F	SL	Ref.
In-69	0h1545	P5 terminal function setting	8	Speed-M	7: Sp-L	X	O	O	p.91
			9	Speed-H					p.91
In-70	0h1546	P6 terminal function setting	11	XCEL-L	8: Sp-M	X	O	O	p.100
			12	XCEL-M					p.100
In-71	0h1547	P7 terminal function setting	13	RUN Enable	9: Sp-H	X	O	O	p.145
			14	3-Wire					p.143
In-72	0h1548	P8 terminal function setting	15	2nd Source	0: None	X	O	O	p.119
			16	Exchange					p.179
			17	Up					p.140
			18	Down					p.140
			20	U/D Clear					p.140
			21	Analog Hold					p.90
			22	I-Term Clear					p.150
			23	PID Openloop					p.150
			24	P Gain2					p.150
			25	XCEL Stop					p.105
			26	2nd Motor					p.178
			27	U/D Enable					p.140
			33	Base block					p.202
			34	Pre Excite					p.113
			38	Timer In					p.184
			40	dis Aux Ref					p.134
			46	FWD JOG					p.139
			47	REV JOG					p.139
			49	XCEL-H					p.100
			50	User Seq					p.123
			51	Fire Mode					p.113
			52	KEB-1 Select					p.184
In-84	0h1554	Multi-function input terminal On filter selection	P8–P1		1111 1111[33]	O	O	O	p.120
			0	Disable(Off)					
			1	Enable(On)					
In-85	0h1555	Multi-function input terminal On filter	0–10000 (ms)		10	O	O	O	p.120

[33] It will be displayed on the keypad as .

Code	Comm. Address	Name	Setting Range		Initial Value	Property*	V/F	SL	Ref.
In-86	0h1556	Multi-function input terminal Off filter	0–10000 (ms)		3	O	O	O	p.120
In-87	0h1557	Multi-function input terminal selection	P8 – P1		0 0000[34]	X	O	O	p.120
			0	A contact (NO)					
			1	B contact (NC)					
In-88	0h1558	Selects the NO/NC operation command	0	NO/NC	0	X	O	O	
			1	NO					
In-89	0h1559	Multi-step command delay time	1–5000 (ms)		1	X	O	O	p.91
In-90	0h155A	Multi-function input terminal status	P8–P1		0 0000	-	O	O	p.120
			0	release(Off)					
			1	Connection(On)					
In-99	0h1563	SW1 (NPN/PNP), status	Bit	0–1	0	-	O	O	-
			0	NPN					
			1	PNP					

8.7 Output Terminal Block Function Group (PAR→OU)

In the following table, data shaded in grey will be displayed when the related code has been selected.

SL: Sensorless vector control (dr.09), Property: Write-enabled during operation

Code	Comm. Address	Name	Setting Range		Initial Value	Property*	V/F	SL	Ref.
OU-00	-	Jump Code	1–99		30	O	O	O	p.57
OU-01	0h1601	Analog output 1 item	0	Frequency	0: Frequency	O	O	O	p.190
			1	Output Current					
			2	Output Voltage					
			3	DCLink Voltage					
			4	Torque					
			5	Output Power					
			6	Idse					

[34] It will be displayed on the keypad as 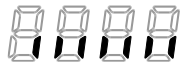 .

Code	Comm. Address	Name	Setting Range		Initial Value	Property*	V/F	SL	Ref.
			7	Iqse					
			8	Target Freq					
			9	Ramp Freq					
			10	Speed Fdb					
			12	PID Ref Value					
			13	PID Fdb Value					
			14	PID Output					
			15	Constant					
OU-02	0h1602	Analog output 1 gain	-1000.0–1000.0 (%)		100.0	O	O	O	p.190
OU-03	0h1603	Analog output 1 bias	-100–100 (%)		0	O	O	O	p.190
OU-04	0h1604	Analog output 1 filter	0–10000 (ms)		5	O	O	O	p.190
OU-05	0h1606	Analog constant output1	0.0–100.0 (%)		0.0	O	O	O	p.190
OU-06	0h1606	Analog output1 monitor	0.0–1000.0 (%)		0.0	-	O	O	p.190
OU-07	0h1607	Analog output 2 item	0	Frequency	0: Frequency	O	O	O	p.190
			1	Output Current					
			2	Output Voltage					
			3	DCLink Voltage					
			4	Torque					
			5	Output Power					
			6	Idse					
			7	Iqse					
			8	Target Freq					
			9	Ramp Freq					
			12	PID Ref Value					
			13	PID Fdb Value					
			14	PID Output					
			15	Constant					
OU-08	0h1608	Analog output 2 gain	-1000~1000(%)		100.0	O	O	O	p.190
OU-09	0h1609	Analog output 2 bias	-100~100(%)		0	O	O	O	p.190

Code	Comm. Address	Name	Setting Range		Initial Value	Property*	V/F	SL	Ref.
OU-10	0h160A	Analog output 2 filter	0~10000(ms)		5	O	O	O	p.190
OU-11	0h160B	Analog constant output2	0.0~100.0(%)		0.0	O	O	O	p.190
OU-12	0h160C	Analog output2 monitor	0.0~1000.0(%)		0.0	-	O	O	p.190
OU-30	0h161E	Fault output item	bit	000–111	010[35]	O	O	O	p.200
			1	Low voltage					
			2	Any faults other than low voltage					
			3	Final failure of automatic restart					
OU-31	0h161F	Multi-function relay 1 item	0	None	29: Trip	O	O	O	p.195
			1	FDT-1					
			2	FDT-2					
			3	FDT-3					
			4	FDT-4					
			5	OverLoad					
			6	IOL					
			7	Under Load					
			8	Fan Warning					
			9	Stall					
			10	Over Voltage					
			11	Low Voltage					
			12	Over Heat					
			13	Lost Command					
			14	Run					
			15	Stop					
			16	Steady					
			17	Inverter Line					
			18	Comm Line					
			19	Speed Search					
			21	Regeneration					
			22	Ready					
			23	Zero Speed					
			28	Timer Out					

[35] It will be displayed on the keypad as 8888.

Code	Comm. Address	Name	Setting Range		Initial Value	Property*	V/F	SL	Ref.
			29	Trip					
			31	DB Warn%ED					
			34	On/Off Control					
			35	BR Control					
			36	Reserved					
			37	FAN Exchange					
			38	Fire Mode					
			40	KEB Operating					
			41	Pre Overheat					
			42	Minor fault					
			43	Torque Detect1					
			44	Torque Detect2					
			45	PID Sleep					
OU-33	0h1621	Multi-function relay 2 item	0	None	14: Run	O	O	O	p.195
			1	FDT-1					
			2	FDT-2					
			3	FDT-3					
			4	FDT-4					
			5	OverLoad					
			6	IOL					
			7	Under Load					
			8	Fan Warning					
			9	Stall					
			10	Over Voltage					
			11	Low Voltage					
			12	Over Heat					
			13	Lost Command					
			14	Run					
			15	Stop					
			16	Steady					
			17	Inverter Line					
			18	Comm Line					
			19	Speed Search					
			21	Regeneration					
			22	Ready					
			23	Zero Speed					
			28	Timer Out					
			29	Trip					
			31	DB Warn%ED					
			34	On/Off Control					
			35	BR Control					
			36	Reserved					
			37	FAN Exchange					

Code	Comm. Address	Name	Setting Range		Initial Value	Property*	V/F	SL	Ref.
			38	Fire Mode					
			40	KEB Operating					
			41	Pre Overheat					
			42	Minor fault					
			43	Torque Detect1					
			44	Torque Detect2					
			45	PID Sleep					
OU-41	0h1629	Multi-function relay monitor	-		00	-	-	-	p.195
OU-50	0h1632	Multi-function relay On delay	0.00–100.00 (s)		0.00	O	O	O	p.201
OU-51	0h1633	Multi-function relay Off delay	0.00–100.00 (s)		0.00	O	O	O	p.201
OU-52	0h1634	Multi-function relay contact selection	Relay2(Q1[36]), Relay1		00[37]	X	O	O	p.201
			0	A contact (NO)					
			1	B contact (NC)					
OU-53	0h1635	Fault output On delay	0.00–100.00 (s)		0.00	O	O	O	p.200
OU-54	0h1636	Fault output Off delay	0.00–100.00 (s)		0.00	O	O	O	p.200
OU-55	h1637	Timer On delay	0.00–100.00 (s)		0.00	O	O	O	p.184
OU-56	0h1638	Timer Off delay	0.00–100.00 (s)		0.00	O	O	O	p.184
OU-57	0h1639	Detection frequency	0.00–Maximum frequency (Hz)		30.00	O	O	O	p.195
OU-58	0h163A	Detection frequency band	0.00–Maximum frequency (Hz)		10.00	O	O	O	p.195
OU-67	0h1643	Torque detection 1 operation setting[38]	0	None	0	X	O	O	p.195
			1	OT CmdSpd Warn					
			2	OT Warning					

[36] G100C

[37] It will be displayed on the keypad as 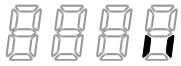 .

[38] Visible only when the multi-function relay (OU.31, 33) is set to 43 (Prt Trq Det 1).

Code	Comm. Address	Name	Setting Range		Initial Value	Property*	V/F	SL	Ref.
			3	OT CmdSpdTrip					
			4	OT Trip					
			5	UT CmdSpd Warn					
			6	UT Warning					
			7	UT CmdSpdTrip					
			8	UT Trip					
OU-68	0h1644	Torque detection 1 level[38]	0.0~200.0		100.0	O	O	O	p.233
OU-69	0h1645	Torque detection 1 delay time[38]	0~100		1	O	O	O	p.233
OU-70	0h1646	Torque detection 2 operation setting[39]	0	None	0	X	O	O	p.233
			1	OT CmdSpd Warn					
			2	OT Warning					
			3	OT CmdSpdTrip					
			4	OT Trip					
			5	UT CmdSpd Warn					
			6	UT Warning					
			7	UT CmdSpdTrip					
			8	UT Trip					
OU-71	0h1647	Torque detection 2 level[39]	0.0~200.0		100.0	O	O	O	p.233
OU-72	0h1648	Torque detection 2 delay time[39]	0~100		1	O	O	O	p.233

[39] Visible only when the multi-function relay (OU.31, 33) is set to 44 (Prt Trq Det 2).

8.8 Communication Function Group (PAR→CM)

In the following table, data shaded in grey will be displayed when the related code has been selected.

SL: Sensorless vector control (dr.09), Property: Write-enabled during operation

Code	Comm. Address	Name	Setting Range		Initial Value	Property*	V/F	SL	Ref.
CM-00	-	Jump Code	1–99		20	O	O	O	p.57
CM-01	0h1701	Built-in communication inverter ID	1–250		1	O	O	O	p.241
CM-02	0h1702	Built-in communication protocol	0	ModBus RTU	0: ModBus RTU	O	O	O	p.241
			2	LS INV 485					
CM-03	0h1703	Built-in baud rate	0	1200 bps	3: 9600 bps	O	O	O	p.241
			1	2400 bps					
			2	4800 bps					
			3	9600 bps					
			4	19200 bps					
			5	38400 bps					
			6	56 Kbps					
			7	115 Kbps[40]					
CM-04	0h1704	Built-in communication frame setting	0	D8/PN/S1	0: D8/PN/S1	O	O	O	p.241
			1	Reserved					
			2	D8/PE/S1					
			3	D8/PO/S1					
CM-05	0h1705	Transmission delay after reception	0–1000 (ms)		5ms	O	O	O	p.241
CM-06[41]	0h1706	Communication option S/W version	-		0.00	O	O	O	-
CM-07[41]	0h1707	Communication option inverter ID	0–255		1	O	O	O	-
CM-08[41]	0h1708	FIELD BUS baud rate	-		12Mbps	-	O	O	-
CM-09[41]	0h1709	Communication option LED status	-		-	O	O	O	-
CM-28	0h171C	Communication	0	None	1: Free-	O	O	O	p.244

[40] 115200 bps

[41] Displayed only when a communication option card is installed.

Code	Comm. Address	Name	Setting Range	Initial Value	Property*	V/F	SL	Ref.
		Idle Status Mode	1 Free-Run 2 Dec	Run				
CM-30	0h171E	Number of output parameters	0–16	3	O	O	O	p.246
CM-31	0h171F	Output communication address 1	0000–FFFF Hex	000A	O	O	O	p.246
CM-32	0h1720	Output communication address 2	0000–FFFF Hex	000E	O	O	O	p.246
CM-33	0h1721	Output communication address 3	0000–FFFF Hex	000F	O	O	O	p.246
CM-34	0h1722	Output communication address 4	0000–FFFF Hex	0000	O	O	O	p.246
CM-35	0h1723	Output communication address 5	0000–FFFF Hex	0000	O	O	O	p.246
CM-36	0h1724	Output communication address 6	0000–FFFF Hex	0000	O	O	O	p.246
CM-37	0h1725	Output communication address 7	0000–FFFF Hex	0000	O	O	O	p.246
CM-38	0h1726	Output communication address 8	0000–FFFF Hex	0000	O	O	O	p.246
CM-39	0h1727	Output communication address 9	0000–FFFF Hex	0000	O	O	O	p.246
CM-40	0h1728	Output communication address 10	0000–FFFF Hex	0000	O	O	O	p.246
CM-41	0h1729	Output communication address 11	0000–FFFF Hex	0000	O	O	O	p.246
CM-42	0h172A	Output communication address 12	0000–FFFF Hex	0000	O	O	O	p.246
CM-43	0h172B	Output communication address 13	0000–FFFF Hex	0000	O	O	O	p.246
CM-44	0h172C	Output	0000–FFFF	0000	O	O	O	p.246

Code	Comm. Address	Name	Setting Range	Initial Value	Property*	V/F	SL	Ref.
		communication address 14	Hex					
CM-45	0h172D	Output communication address 15	0000–FFFF Hex	0000	O	O	O	p.246
CM-46	0h172E	Output communication address 16	0000–FFFF Hex	0000	O	O	O	p.246
CM-50	0h1732	Number of input parameters	0–16	2	O	O	O	p.246
CM-51	0h1733	Input communication address 1	0000–FFFF Hex	0005	X	O	O	p.246
CM-52	0h1734	Input communication address 2	0000–FFFF Hex	0006	X	O	O	p.246
CM-53	0h1735	Input communication address 3	0000–FFFF Hex	0000	X	O	O	p.246
CM-54	0h1736	Input communication address 4	0000–FFFF Hex	0000	X	O	O	p.246
CM-55	0h1737	Input communication address 5	0000–FFFF Hex	0000	X	O	O	p.246
CM-56	0h1738	Input communication address 6	0000–FFFF Hex	0000	X	O	O	p.246
CM-57	0h1739	Input communication address 7	0000–FFFF Hex	0000	X	O	O	p.246
CM-58	0h173A	Input communication address 8	0000–FFFF Hex	0000	X	O	O	p.246
CM-59	0h173B	Input communication address 9	0000–FFFF Hex	0000	X	O	O	p.246
CM-60	0h173C	Input communication address 10	0000–FFFF Hex	0000	X	O	O	p.246
CM-61	0h173D	Input communication address 11	0000–FFFF Hex	0000	X	O	O	p.246
CM-62	0h173E	Input	0000–FFFF	0000				p.246

Code	Comm. Address	Name	Setting Range		Initial Value	Property*	V/F	SL	Ref.
		communication address 12	Hex			X	O	O	
CM-63	0h173F	Input communication address 13	0000–FFFF Hex		0000	X	O	O	p.246
CM-64	0h1740	Input communication address 14	0000–FFFF Hex		0000	X	O	O	p.246
CM-65	0h1741	Input communication address 15	0000–FFFF Hex		0000	X	O	O	p.246
CM-66	0h1742	Input communication address 16	0000–FFFF Hex		0000	X	O	O	p.246
CM-68	0h1744	Field bus data swap	0	No	0	X	O	O	p.246
			1	Yes					
CM-70	0h1746	Communication multi-function input 1	0	None	0: None	O	O	O	p.268
CM-71	0h1747	Communication multi-function input 2	1	FX	0: None	O	O	O	p.268
CM-72	0h1748	Communication multi-function input 3	2	RX	0: None	O	O	O	p.268
CM-73	0h1749	Communication multi-function input 4	3	RST	0: None	O	O	O	p.268
CM-74	0h174A	Communication multi-function input 5	4	External Trip	0: None	O	O	O	p.268
CM-75	0h174B	Communication multi-function input 6	5	BX	0: None	O	O	O	p.268
CM-76	0h174C	Communication multi-function input 7	6	JOG	0: None	O	O	O	p.268
CM-77	0h174D	Communication multi-function input 8	7	Speed-L	0: None	O	O	O	p.268
			8	Speed-M					
			9	Speed-H					
			11	XCEL-L					
			12	XCEL-M					
			13	RUN Enable					
			14	3-Wire					

Code	Comm. Address	Name	Setting Range		Initial Value	Property*	V/F	SL	Ref.
			15	2nd Source					
			16	Exchange					
			17	Up					
			18	Down					
			20	U/D Clear					
			21	Analog Hold					
			22	I-Term Clear					
			23	PID Openloop					
			24	P Gain2					
			25	XCEL Stop					
			26	2nd Motor					
			27	U/D Enable					
			33	Base block					
			34	Pre Excite					
			38	Timer In					
			40	dis Aux Ref					
			46	FWD JOG					
			47	REV JOG					
			49	XCEL-H					
			51	Fire Mode					
			52	KEB-1 Select					
CM-86	0h1756	Communication multi-function input monitoring	-		0	X	O	O	p.244
CM-90	0h175A	Selection of data frame communication monitor	0	Int485	0	O	O	O	-
			1	KeyPad					
CM-91	0h175B	Rev Data frame count	0–65535		-	X	O	O	-
CM-92	0h175C	Err Data frame count	0–65535		-	X	O	O	-
CM-93	0h175D	NAK Data frame count	0–65535		-	X	O	O	-
CM-94[42]	-	Communication data upload	0	No	0: No	X	O	O	-
			1	Yes					

[42] Displayed only when a communication option card is installed.

8.9 Application Function Group (PAR→AP)

In the following table, data shaded in grey will be displayed when the related code has been selected.

SL: Sensorless vector control (dr.09), Property: Write-enabled during operation

Code	Comm. Address	Name	Setting Range		Initial Value	Property*	V/F	SL	Ref.
AP-00	-	Jump Code	1–99		20	O	O	O	p.57
AP-01	0h1801	Application function selection	0	None	0: None	X	O	O	p.150
			1	-					
			2	Proc PID					
AP-02	-	Enable User Sequences	0	No	0: No	X	O	O	p.123
			1	Yes					
AP-16[43]	0h1810	PID output monitor	(%)		0.00	-	O	O	p.150
AP-17[43]	0h1811	PID reference monitor	(%)		50.00	-	O	O	p.150
AP-18[43]	0h1812	PID feedback monitor	(%)		0.00	-	O	O	p.150
AP-19[43]	0h1813	PID reference setting	-100.00–100.00 (%)		50.00	O	O	O	p.150
AP-20[43]	0h1814	PID reference source	0	Keypad	0: Keypad	X	O	O	p.150
			1	V1					
			2	V2					
			3	V0					
			4	I2					
			5	Int 485					
			7	FieldBus					
			8	UserSeq Link					
AP-21[43]	0h1815	PID feedback source	0	V1	0: V1	X	O	O	p.150
			1	V2					
			2	V0					
			3	I2					
			4	Int 485					
			6	FieldBus					
			7	UserSeq Link					
AP-22[43]	0h1816	PID controller proportional gain	0.0–1000.0 (%)		50.0	O	O	O	p.150

[43] Displayed when AP.01 is set to 2 (Proc PID).

Code	Comm. Address	Name	Setting Range	Initial Value	Property*	V/F	SL	Ref.
AP-23[43]	0h1817	PID controller integral time	0.0–200.0 (s)	10.0	O	O	O	p.150
AP-24[43]	0h1818	PID controller differentiation time	0–1000 (ms)	0	O	O	O	p.150
AP-25[43]	0h1819	PID controller feed-forward compensation gain	0.0–1000.0 (%)	0.0	O	O	O	p.150
AP-26[43]	0h181 A	Proportional gain scale	0.0–100.0 (%)	100.0	X	O	O	p.150
AP-27[43]	0h181B	PID output filter	0–10000 (ms)	0	O	O	O	p.150
AP-28[43]	0h181C	PID Mode	0 Process PID 1 Normal PID	0	X	O	O	-
AP-29[43]	0h181D	PID upper limit frequency	PID lower limit frequency–300.00 (Hz)	60.00	O	O	O	p.150
AP-30[43]	0h181E	PID lower limit frequency	-300.00 –PID upper limit frequency(Hz)	-60.00	O	O	O	p.150
AP-31[43]	0h181F	Anti Wind up	0 No 1 Yes	0: No	O	O	O	p.150
AP-32[43]	0h1820	PID output scale	0.1–1000.0 (%)	100.0	X	O	O	p.150
AP-33[43]	0h1821	PID output inverse	0 No 1 Yes	0: No	X	O	O	p.150
AP-34[43]	0h1822	PID controller motion frequency	0.00–Maximum frequency (Hz)	0.00	X	O	O	p.150
AP-35[43]	0h1823	PID controller motion level	0.0–100.0 (%)	0.0	X	O	O	p.150
AP-36[43]	0h1824	PID controller motion delay time	0–9999 (s)	600	O	O	O	p.150
AP-37[43]	0h1825	PID sleep mode delay time	0.0–999.9 (s)	60.0	O	O	O	p.150
AP-38[43]	0h1826	PID sleep	0.00–	0.00	O	O	O	p.150

Code	Comm. Address	Name	Setting Range		Initial Value	Property*	V/F	SL	Ref.
		mode frequency	Maximum frequency (Hz)						
AP-39[43]	0h1827	PID wake-up level	0–100 (%)		35	O	O	O	p.150
AP-40[43]	0h1828	PID wake-up mode setting	0	Below Level	0: Below Level	O	O	O	p.150
			1	Above Level					
			2	Beyond Level					
AP-43[43]	0h182B	PID unit gain	0.00–300.00 (%)		100.00	O	O	O	p.150
AP-44[43]	0h182C	PID unit scale	0	x100	2: x 1	O	O	O	p.150
			1	x10					
			2	x 1					
			3	x 0.1					
			4	x 0.01					
AP-45[43]	0h182D	PID 2nd proportional gain	0.0–1000.0 (%)		100.0	X	O	O	p.150

8.10 Protection Function Group (PAR→Pr)

In the following table, data shaded in grey will be displayed when the related code has been selected.

SL: Sensorless vector control (dr.09), Property: Write-enabled during operation

Code	Comm. Address	Name	Setting Range		Initial Value	Property*	V/F	SL	Ref.
Pr-00	-	Jump Code	1–99		40	O	O	O	p.57
Pr-04[44]	0h1B04	Load level setting	0	Normal Duty	1: Heavy Duty	X	O	O	p.211
			1	Heavy Duty					
Pr-05	0h1B05	Input/output	bit	00–11	00[45]	X	O	O	p.218

[44] 22 kW 200 V models can be set to only 1:Heavy Duty.

[45] It will be displayed on the keypad as 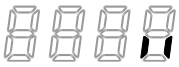 .

Code	Comm. Address	Name	Setting Range		Initial Value	Property *	V/F	SL	Ref.
		open-phase protection	01	Output open phase					
			10	Input open phase					
Pr-06	0h1B06	Input voltage range during open-phase	1–100 (V)		15	X	O	O	p.218
Pr-07	0h1B07	Deceleration time at fault trip	0.0–600.0 (s)		3.0	O	O	O	-
Pr-08	0h1B08	Selection of startup on trip reset	0	No	0: No	O	O	O	p.175
			1	Yes					
Pr-09	0h1B09	Number of automatic restarts	0–10		0	O	O	O	p.175
Pr-10[46]	0h1B0A	Automatic restart delay time	0.0–60.0 (s)		1.0	O	O	O	p.175
Pr-12	0h1B0C	Motion at speed command loss	0	None	0: None	O	O	O	p.220
			1	Free-Run					
			2	Dec					
			3	Hold Input					
			4	Hold Output					
			5	Lost Preset					
Pr-13[47]	0h1B0D	Time to determine speed command loss	0.0–120.0 (s)		1.0	O	O	O	p.220
Pr-14[47]	0h1B0E	Operation frequency at speed command loss	0, Start frequency–Maximum frequency(Hz)		0.00	O	O	O	p.220
Pr-15[47]	0h1B0F	Analog input loss decision level	0	Half of x1	0: Half of x1	O	O	O	p.220
			1	Below x1					
Pr-17	0h1B11	Overload warning selection	0	No	0: No	O	O	O	p.211
			1	Yes					

[46] Displayed when Pr.09 is set higher than 0.

[47] Displayed when Pr.12 is not set to 0 (NONE).

Code	Comm. Address	Name	Setting Range		Initial Value	Property *	V/F	SL	Ref.
Pr-18	0h1B12	Overload warning level	30–180 (%)		150	O	O	O	p.211
Pr-19	0h1B13	Overload warning time	0.0–30.0 (s)		10.0	O	O	O	p.211
Pr-20	0h1B14	Motion at overload fault	0	None	1: Free-Run	O	O	O	p.211
			1	Free-Run					
			2	Dec					
Pr-21	0h1B15	Overload fault level	30–200 (%)		180	O	O	O	p.211
Pr-22	0h1B16	Overload fault time	0.0–60.0 (s)		60.0	O	O	O	p.211
Pr-25	0h1B19	Under load warning selection	0	No	0: No	O	O	O	p.225
			1	Yes					
Pr-26	0h1B1A	Under load warning time	0.0–600.0 (s)		10.0	O	O	O	p.225
Pr-27	0h1B1B	Under load fault selection	0	None	0: None	O	O	O	p.225
			1	Free-Run					
			2	Dec					
			3	Underload Sleep					
Pr-28	0h1B1C	Under load fault time	0.0–600.0 (s)		30.0	O	O	O	p.225
Pr-29	0h1B1D	Under load lower limit level	10–100 (%)		30	O	O	O	p.225
Pr-30	0h1B1E	Under load upper limit level	10–100 (%)		30	O	O	O	p.225
Pr-31	0h1B1F	No motor motion at detection	0	None	0: None	O	O	O	p.231
			1	Free-Run					
Pr-32	0h1B20	No motor detection current level	1–100 (%)		5	O	O	O	p.231
Pr-33	0h1B21	No motor detection time	0.1–10.0 (s)		3.0	O	O	O	p.231
Pr-34	0h1B22	PTC Fault Mode	0	None	0	O	O	O	p.208
			1	Warning					
			2	Free-Run					
			3	Dec					
Pr-35	0h1B23	Temperature	0	PTC	PTC	O	O	O	p.208

Code	Comm. Address	Name	Setting Range		Initial Value	Property *	V/F	SL	Ref.
		sensor type	1	PT1000					
Pr-36	0h1B24	Number of temperature sensor connections	0	3-Serial	3-Serial	O	O	O	p.208
			1	1-Serial					
Pr-37[48]	0h1B25	Fault temperature setting	-10~180		120	O	O	O	p.208
Pr-38[48]	0h1B26	Temperature warning release level	-10~180		100	O	O	O	p.208
Pr-39[48]	0h1B27	Temperature monitoring	-10~180		0	O	O	O	p.208
Pr-40	0h1B28	Electronic thermal fault selection	0	None	0: None	O	O	O	p.206
			1	Free-Run					
			2	Dec					
Pr-41	0h1B29	Motor cooling fan type	0	Self-cool	0: Self-cool	O	O	O	p.206
			1	Forced-cool					
Pr-42	0h1B2A	Electronic thermal 1 minute rating	120–200 (%)		150	O	O	O	p.206
Pr-43	0h1B2B	Electronic thermal continuous rating	50–150 (%)		120	O	O	O	p.206
Pr-45	0h1B2D	BX trip mode	0	Free-Run	0	X	O	O	-
			1	Dec					
Pr-50	0h1B32	Stall prevention motion and flux braking	bit	00000–11111	0 0000	X	O	X	p.213
			0 0001	Accelerating (Mode1)					
			1 0001	Accelerating (Mode2)					
			0 0010	At constant speed (Mode1)					
			1 0010	At constant speed (Mode2)					

[48] Displayed when Pr.35 is set to 1(PT1000)

Code	Comm. Address	Name	Setting Range		Initial Value	Property *	V/F	SL	Ref.
			#0100	Decelerating (Mode1)					
			#1000	Flux Braking					
Pr-51	0h1B33	Stall frequency 1	Start frequency–Stall frequency2 (Hz)		60.00	O	O	X	p.213
Pr-52	0h1B34	Stall level 1	30–250 (%)		180	X	O	X	p.213
Pr-53	0h1B35	Stall frequency 2	Start frequency1–Stall frequency3 (Hz)		60.00	O	O	X	p.213
Pr-54	0h1B36	Stall level 2	30–250 (%)		180	X	O	X	p.213
Pr-55	0h1B37	Stall frequency 3	Start frequency2–Stall frequency4 (Hz)		60.00	O	O	X	p.213
Pr-56	0h1B38	Stall level 3	30–250 (%)		180	X	O	X	p.213
Pr-57	0h1B39	Stall frequency 4	Stall frequency3–Maximum frequency(Hz)		60.00	O	O	X	p.213
Pr-58	0h1B3A	Stall level 4	30–250 (%)		180	X	O	X	p.213
Pr-59	0h1B3B	Flux braking Gain value	0–150 (%)		0	O	O	O	-
Pr-66	0h1B42	DB resistor warning level	0–30 (%)		10	O	O	O	p.243
Pr-67	0h1B43	Select operation in case of loss of Fieldbus command	0	None	1:Free-run	O	O	O	p.243
			1	Free-Run					
			2	Dec					
Pr-68	0h1B44	Fieldbus command loss determination time	0.0~120.0		0.0	O	O	O	p.243
Pr-77	0h1B4D	Pre-overheat warning temperature	90–110		90	O	O	O	p.232
Pr-78	0h1B4E	Pre-overheat warning operation selection	0	NONE	0	O	O	O	p.232
			1	Warning					
			2	Free-Run					
			3	Dec					
Pr-79	0h1B4F	Cooling fan fault selection	0	Trip	1: Warning	O	O	O	p.227
			1	Warning					

Code	Comm. Address	Name	Setting Range		Initial Value	Property *	V/F	SL	Ref.
			2	Temp. Warning					
Pr-80	0h1B50	Motion selection at option trip	0	None	1: Free-Run	O	O	O	p.230
			1	Free-Run					
			2	Dec					
Pr-81	0h1B51	Low voltage fault decision delay time	0.0–60.0 (s)		0.0	X	O	O	p.227
Pr-82	0h1B52	LV2 Selection	0	No	0	X	O	O	-
			1	Yes					
Pr-86	0h1B56	Accumulated percentage of fan usage	0.0–100.0[%]		0.0	-	O	O	-
Pr-87	0h1B57	Fan exchange warning level	0.0–100.0[%]		90.0	O	O	O	-
Pr-88	0h1B58	Fan reset time	0	No	0	X	O	O	-
			1	Yes					
Pr-89	0h1B59	FAN Status	Bit	00–01	0	-	O	O	-
			00	-					
			01	FAN Exchange					
Pr-90	0h1B5A	Relay Open Trip selection	-		-	X	O	O	-
Pr-91	0h1B5B	Fault history 1	-		-	-	O	O	-
Pr-92	0h1B5C	Fault history 2	-		-	-	O	O	-
Pr-93	0h1B5D	Fault history 3	-		-	-	O	O	-
Pr-94	0h1B5E	Fault history 4	-		-	-	O	O	-
Pr-95	0h1B5F	Fault history 5	-		-	-	O	O	-
Pr-96	0h1B60	Fault history deletion	0	No	0: No	O	O	O	-
			1	Yes					

8.11 2nd Motor Function Group (PAR→M2)

The 2nd Motor function group will be displayed if any of In.65-72 is set to 26 (2nd MOTOR).

In the following table, data shaded in grey will be displayed when the related code has been selected.

SL: Sensorless vector control (dr.09), Property: Write-enabled during operation

Code	Comm. Address	Name	Setting Range		Initial Value	Property*	V/F	SL	Ref.
M2-00	-	Jump Code	1–99		14	O	O	O	p.57
M2-04	0h1C04	Acceleration time	0.0–600.0 (s)		20.0	O	O	O	p.178
M2-05	0h1C05	Deceleration time	0.0–600.0 (s)		30.0	O	O	O	p.178
M2-06	0h1C06	Motor capacity	0	0.2 kW	-	X	O	O	p.178
			1	0.4 kW					
			2	0.75 kW					
			3	1.1 kW					
			4	1.5 kW					
			5	2.2 kW					
			6	3.0 kW					
			7	3.7 kW					
			8	4.0 kW					
			9	5.5 kW					
			10	7.5 kW					
			11	11.0 kW					
			12	15.0kW					
			13	18.5kW					
			14	22.0kW					
			15	30.0kW					
M2-07	0h1C07	Base frequency	30.00–400.00 (Hz)		60.00	X	O	O	
M2-08	0h1C08	Control mode	0	V/F	0: V/F	X	O	O	p.178
			2	Slip Compen					
			4	IM Sensorless					
M2-10	0h1C0A	Number of motor poles	2–48		Dependent on motor setting	X	O	O	p.178
M2-11	0h1C0B	Rated slip speed	0–3000 (Rpm)			X	O	O	p.178
M2-12	0h1C0C	Motor rated current	1.0–1000.0 (A)			X	O	O	p.178

Code	Comm. Address	Name	Setting Range	Initial Value	Property*	V/F	SL	Ref.
M2-13	0h1C0D	Motor noload current	0.5–1000.0 (A)		X	O	O	p.178
M2-14	0h1C0E	Motor rated voltage	170–480 (V)		X	O	O	p.178
M2-15	0h1C0F	Motor efficiency	64–100 (%)		X	O	O	p.178
M2-16	0h1C10	Load inertia rate	0–8		X	O	O	p.178
M2-17	-	Stator resistance	Dependent on motor setting		X	O	O	p.178
M2-18	-	Leakage inductance			X	O	O	p.178
M2-19	-	Stator inductance			X	O	O	p.178
M2-20[49]	-	Rotor time constant	25–5000 (ms)		X	O	O	p.178
M2-25	0h1C19	V/F pattern	0 Linear 1 Square 2 User V/F	0: Linear	X	O	O	p.178
M2-26	0h1C1 A	Forward Torque boost	0.0–15.0 (%)	2.0	X	O	O	p.178
M2-27	0h1C1B	Reverse torque boost	0.0–15.0 (%)		X	O	O	p.178
M2-28	0h1C1C	Stall prevention level	30–150 (%)	150	X	O	O	p.178
M2-29	0h1C1D	Electronic thermal 1 minute rating	100–200 (%)	150	X	O	O	p.178
M2-30	0h1C1E	Electronic thermal continuous rating	50–Electronic thermal 1 minute rating	100	X	O	O	p.178
M2-31	0h1C1F	Low-speed torque compensation gain	50–300 (%)	Varies by Motor capacity	X	X	O	p 162
M2-32	0h1C20	Stator leakage inductance scale	50–300 (%)	Varies by Motor capacity	X	X	O	p 162
M2-33	0h1C21	Stator inductance scale	50–300 (%)	Varies by Motor capacity	X	X	O	p 162

[49] Displayed when M2.08 is set to 4 (IM Sensorless).

Code	Comm. Address	Name	Setting Range		Initial Value	Property*	V/F	SL	Ref.
M2-34	0h1C12	Rotor time constant scale	50–300 (%)		Varies by Motor capacity	X	X	O	p 162
M2-40	0h1C28	Rotation count speed gain	0.1–6000.0[%]		100.0	O	O	O	-
M2-41	0h1C29	Rotation count speed scale	0	x 1	0: x 1	O	O	O	-
			1	x 0.1					
			2	x 0.01					
			3	x 0.001					
			4	x 0.0001					
M2-42	0h1C2A	Rotation count speed unit	0	Rpm	0: rpm	O	O	O	-
			1	mpm					

8.12 User Sequence Group(PAR→US)

US/UF groups appear when the AP.02 code is set to 1 (Yes) and parameters cannot be modified during user sequence operation.

*From main firmware version 3.10(dr.97), G100(C) is equipped with the User Sequence functions.

SL: Sensorless vector control (dr.09), Properties: Writeable while driving

Code	Comm-Address	Name	Setting Range		Initial Value	Property*	V/F	SL	Ref.
US-00	-	Jump Code	1~99		31	O	O	O	p.57
US-01	0h1901	User sequence driving instructions	0	Stop	0:Stop	X	O	O	p.123
			1	Run					
			2	Digital In Run					
US-02	0h1902	User sequence operation time	0	0.01s	1:0.02s	O	O	O	p.123
			1	0.02s					
			2	0.05s					
			3	0.1s					
			4	0.5s					
			5	1s					
US-11	0h190B	Output address link1	0~0xFFFF		0	O	O	O	p.123
US-12	0h190C	Output address link2	0~0xFFFF		0	O	O	O	p.123

Code	Comm-Address	Name	Setting Range	Initial Value	Property*	V/F	SL	Ref.
US-13	0h190D	Output address link3	0~0xFFFF	0	O	O	O	p.123
US-14	0h190E	Output address link4	0~0xFFFF	0	O	O	O	p.123
US-15	0h190F	Output address link5	0~0xFFFF	0	O	O	O	p.123
US-16	0h1910	Output address link6	0~0xFFFF	0	O	O	O	p.123
US-17	0h1911	Output address link7	0~0xFFFF	0	O	O	O	p.123
US-18	0h1912	Output address link8	0~0xFFFF	0	O	O	O	p.123
US-19	0h1913	Output address link9	0~0xFFFF	0	O	O	O	p.123
US-20	0h1914	Output address link10	0~0xFFFF	0	O	O	O	p.123
US-21	0h1915	Output address link11	0~0xFFFF	0	O	O	O	p.123
US-22	0h1916	Output address link12	0~0xFFFF	0	O	O	O	p.123
US-23	0h1917	Output address link13	0~0xFFFF	0	O	O	O	p.123
US-24	0h1918	Output address link14	0~0xFFFF	0	O	O	O	p.123
US-25	0h1919	Output address link15	0~0xFFFF	0	O	O	O	p.123
US-26	0h191A	Output address link16	0~0xFFFF	0	O	O	O	p.123
US-27	0h191B	Output address link17	0~0xFFFF	0	O	O	O	p.123
US-28	0h191C	Output address link18	0~0xFFFF	0	O	O	O	p.123
US-31	0h191F	Set Input Constant1	-9999~9999	0	O	O	O	p.123
US-32	0h1920	Set Input Constant2	-9999~9999	0	O	O	O	p.123
US-33	0h1921	Set Input Constant3	-9999~9999	0	O	O	O	p.123
US-34	0h1922	Set Input Constant4	-9999~9999	0	O	O	O	p.123

Code	Comm-Address	Name	Setting Range	Initial Value	Property*	V/F	SL	Ref.
US-35	0h1923	Set Input Constant5	-9999~9999	0	O	O	O	p.123
US-36	0h1924	Set Input Constant6	-9999~9999	0	O	O	O	p.123
US-37	0h1925	Set Input Constant7	-9999~9999	0	O	O	O	p.123
US-38	0h1926	Set Input Constant8	-9999~9999	0	O	O	O	p.123
US-39	0h1927	Set Input Constant9	-9999~9999	0	O	O	O	p.123
US-40	0h1928	Set Input Constant10	-9999~9999	0	O	O	O	p.123
US-41	0h1929	Set Input Constant11	-9999~9999	0	O	O	O	p.123
US-42	0h192A	Set Input Constant12	-9999~9999	0	O	O	O	p.123
US-43	0h192B	Set Input Constant13	-9999~9999	0	O	O	O	p.123
US-44	0h192C	Set Input Constant14	-9999~9999	0	O	O	O	p.123
US-45	0h192D	Set Input Constant15	-9999~9999	0	O	O	O	p.123
US-46	0h192E	Set Input Constant16	-9999~9999	0	O	O	O	p.123
US-47	0h192F	Set Input Constant17	-9999~9999	0	O	O	O	p.123
US-48	0h1930	Set Input Constant18	-9999~9999	0	O	O	O	p.123
US-49	0h1931	Set Input Constant19	-9999~9999	0	O	O	O	p.123
US-50	0h1932	Set Input Constant20	-9999~9999	0	O	O	O	p.123
US-51	0h1933	Set Input Constant21	-9999~9999	0	O	O	O	p.123
US-52	0h1934	Set Input Constant22	-9999~9999	0	O	O	O	p.123
US-53	0h1935	Set Input Constant23	-9999~9999	0	O	O	O	p.123
US-54	0h1936	Set Input Constant24	-9999~9999	0	O	O	O	p.123

Code	Comm-Address	Name	Setting Range	Initial Value	Property*	V/F	SL	Ref.
US-55	0h1937	Set Input Constant25	-9999~9999	0	O	O	O	p.123
US-56	0h1938	Set Input Constant26	-9999~9999	0	O	O	O	p.123
US-57	0h1939	Set Input Constant27	-9999~9999	0	O	O	O	p.123
US-58	0h193A	Set Input Constant28	-9999~9999	0	O	O	O	p.123
US-59	0h193B	Set Input Constant29	-9999~9999	0	O	O	O	p.123
US-60	0h193C	Set Input Constant30	-9999~9999	0	O	O	O	p.123

8.13 User Sequence Function Group(PAR→UF)

US/UF groups appear when the AP.02 code is set to 1 (Yes) and parameters cannot be modified during user sequence operation.

*From main firmware version 3.10(dr.97), G100(C) and G100T is equipped with the User Sequence functions.

SL: Sensorless vector control (dr.09), Properties: Writeable while driving

Code	Comm-Address	Name	Setting Range		Initial Value	Property*	V/F	SL	Ref.
UF-00	-	Jump Code	1~99		41	O	O	O	p.57
UF-01	0h1A01	User Function1	0	NOP	0:NOP	O	O	O	p.123
			1	ADD					
			2	SUB					
			3	ADDSUB					
			4	MIN					
			5	MAX					
			6	ABS					
			7	NEGATE					
			8	MPYDIV					
			9	REMAINDER					
			10	COMPARE-GT					
			11	COMPARE-GEQ					

Code	Comm-Address	Name	Setting Range		Initial Value	Property*	V/F	SL	Ref.
			12	COMPARE-EQUAL					
			13	COMPARE-NEQUAL					
			14	TIMER					
			15	LIMIT					
			16	AND					
			17	OR					
			18	XOR					
			19	ANDOR					
			20	SWITCH					
			21	BITTEST					
			22	BITSET					
			23	BITCLEAR					
			24	LOWPASSFILTER					
			25	PI_CONTORL					
			26	PI_PROCESS					
			27	UPCOUNT					
			28	DOWNCONUT					
UF-02	0h1A02	User Function Input 1-A	0~0xFFFF		0	O	O	O	p.123
UF-03	0h1A03	User Function Input 1-B	0~0xFFFF		0	O	O	O	p.123
UF-04	0h1A04	User Function Input 1-C	0~0xFFFF		0	O	O	O	p.123
UF-05	0h1A05	User Function Output1	-32767~32767		0	-	O	O	p.123
UF-06	0h1A06	User Function 2	0	NOP	0:NOP	O	O	O	p.123
			1	ADD					
			2	SUB					
			3	ADDSUB					
			4	MIN					
			5	MAX					
			6	ABS					
			7	NEGATE					

Code	Comm-Address	Name	Setting Range		Initial Value	Property*	V/F	SL	Ref.
			8	MPYDIV					
			9	REMAINDER					
			10	COMPARE-GT					
			11	COMPARE-GEQ					
			12	COMPARE-EQUAL					
			13	COMPARE-NEQUAL					
			14	TIMER					
			15	LIMIT					
			16	AND					
			17	OR					
			18	XOR					
			19	ANDOR					
			20	SWITCH					
			21	BITTEST					
			22	BITSET					
			23	BITCLEAR					
			24	LOWPASSFILTER					
			25	PI_CONTORL					
			26	PI_PROCESS					
			27	UPCOUNT					
			28	DOWNCONUT					
UF-07	0h1A07	User Function Input 2-A	0~0xFFFF		0	O	O	O	**p.123**
UF-08	0h1A08	User Function Input 2-B	0~0xFFFF		0	O	O	O	**p.123**
UF-09	0h1A09	User Function Input 2-C	0~0xFFFF		0	O	O	O	**p.123**
UF-10	0h1A0A	User Function Output 2	-32767~32767		0	-	O	O	**p.123**
UF-11	0h1A0B	User Function 3	0	NOP	0:NOP	O	O	O	**p.123**
			1	ADD					
			2	SUB					
			3	ADDSUB					

Code	Comm-Address	Name	Setting Range		Initial Value	Property*	V/F	SL	Ref.
			4	MIN					
			5	MAX					
			6	ABS					
			7	NEGATE					
			8	MPYDIV					
			9	REMAINDER					
			10	COMPARE-GT					
			11	COMPARE-GEQ					
			12	COMPARE-EQUAL					
			13	COMPARE-NEQUAL					
			14	TIMER					
			15	LIMIT					
			16	AND					
			17	OR					
			18	XOR					
			19	ANDOR					
			20	SWITCH					
			21	BITTEST					
			22	BITSET					
			23	BITCLEAR					
			24	LOWPASSFILTER					
			25	PI_CONTORL					
			26	PI_PROCESS					
			27	UPCOUNT					
			28	DOWNCONUT					
UF-12	0h1A0C	User Function Input 3-A	0~0xFFFF		0	O	O	O	p.123
UF-13	0h1A0D	User Function Input 3-B	0~0xFFFF		0	O	O	O	p.123
UF-14	0h1A0E	User Function Input 3-C	0~0xFFFF		0	O	O	O	p.123

Code	Comm-Address	Name	Setting Range		Initial Value	Property*	V/F	SL	Ref.
UF-15	0h1A0F	User Function Output 3	-32767~32767		0	-	O	O	p.123
UF-16	0h1A10	User Function 4	0	NOP	0:NOP	O	O	O	p.123
			1	ADD					
			2	SUB					
			3	ADDSUB					
			4	MIN					
			5	MAX					
			6	ABS					
			7	NEGATE					
			8	MPYDIV					
			9	REMAINDER					
			10	COMPARE-GT					
			11	COMPARE-GEQ					
			12	COMPARE-EQUAL					
			13	COMPARE-NEQUAL					
			14	TIMER					
			15	LIMIT					
			16	AND					
			17	OR					
			18	XOR					
			19	ANDOR					
			20	SWITCH					
			21	BITTEST					
			22	BITSET					
			23	BITCLEAR					
			24	LOWPASSFILTER					
			25	PI_CONTORL					
			26	PI_PROCESS					
			27	UPCOUNT					
			28	DOWNCONUT					
UF-17	0h1A11	User Function Input 4-A	0~0xFFFF		0	O	O	O	p.123

Code	Comm-Address	Name	Setting Range		Initial Value	Property*	V/F	SL	Ref.
UF-18	0h1A12	User Function Input 4-B	0~0xFFFF		0	O	O	O	p.123
UF-19	0h1A13	User Function Input 4-C	0~0xFFFF		0	O	O	O	p.123
UF-20	0h1A14	User Function Output4	-32767~32767		0	-	O	O	p.123
UF-21	0h1A15	User Function 5	0	NOP	0:NOP	O	O	O	p.123
			1	ADD					
			2	SUB					
			3	ADDSUB					
			4	MIN					
			5	MAX					
			6	ABS					
			7	NEGATE					
			8	MPYDIV					
			9	REMAINDER					
			10	COMPARE-GT					
			11	COMPARE-GEQ					
			12	COMPARE-EQUAL					
			13	COMPARE-NEQUAL					
			14	TIMER					
			15	LIMIT					
			16	AND					
			17	OR					
			18	XOR					
			19	ANDOR					
			20	SWITCH					
			21	BITTEST					
			22	BITSET					
			23	BITCLEAR					
			24	LOWPASSFILTER					
			25	PI_CONTORL					
			26	PI_PROCESS					

Code	Comm-Address	Name	Setting Range		Initial Value	Property*	V/F	SL	Ref.
			27	UPCOUNT					
			28	DOWNCONUT					
UF-22	0h1A16	User Function Input 5-A	0~0xFFFF		0	O	O	O	p.123
UF-23	0h1A17	User Function Input 5-B	0~0xFFFF		0	O	O	O	p.123
UF-24	0h1A18	User Function Input 5-C	0~0xFFFF		0	O	O	O	p.123
UF-25	0h1A19	User Function Output 5	-32767~32767		0	-	O	O	p.123
UF-26	0h1A1A	User Function 6	0	NOP	0:NOP	O	O	O	p.123
			1	ADD					
			2	SUB					
			3	ADDSUB					
			4	MIN					
			5	MAX					
			6	ABS					
			7	NEGATE					
			8	MPYDIV					
			9	REMAINDER					
			10	COMPARE-GT					
			11	COMPARE-GEQ					
			12	COMPARE-EQUAL					
			13	COMPARE-NEQUAL					
			14	TIMER					
			15	LIMIT					
			16	AND					
			17	OR					
			18	XOR					
			19	ANDOR					
			20	SWITCH					
			21	BITTEST					
			22	BITSET					

Code	Comm-Address	Name	Setting Range		Initial Value	Property*	V/F	SL	Ref.
			23	BITCLEAR					
			24	LOWPASSFILTER					
			25	PI_CONTORL					
			26	PI_PROCESS					
			27	UPCOUNT					
			28	DOWNCONUT					
UF-27	0h1A1B	User Function Input 6-A	0~0xFFFF		0	O	O	O	p.123
UF-28	0h1A1C	User Function Input 6-B	0~0xFFFF		0	O	O	O	p.123
UF-29	0h1A1D	User Function Input 6-C	0~0xFFFF		0	O	O	O	p.123
UF-30	0h1A1E	User Function Output 6	-32767~32767		0	-	O	O	p.123
UF-31	0h1A1F	User Function 7	0	NOP	0:NOP	O	O	O	p.123
			1	ADD					
			2	SUB					
			3	ADDSUB					
			4	MIN					
			5	MAX					
			6	ABS					
			7	NEGATE					
			8	MPYDIV					
			9	REMAINDER					
			10	COMPARE-GT					
			11	COMPARE-GEQ					
			12	COMPARE-EQUAL					
			13	COMPARE-NEQUAL					
			14	TIMER					
			15	LIMIT					
			16	AND					
			17	OR					
			18	XOR					

Code	Comm-Address	Name	Setting Range		Initial Value	Property*	V/F	SL	Ref.
			19	ANDOR					
			20	SWITCH					
			21	BITTEST					
			22	BITSET					
			23	BITCLEAR					
			24	LOWPASSFILTER					
			25	PI_CONTORL					
			26	PI_PROCESS					
			27	UPCOUNT					
			28	DOWNCONUT					
UF-32	0h1A20	User Function Input 7-A	0~0xFFFF		0	O	O	O	p.123
UF-33	0h1A21	User Function Input 7-B	0~0xFFFF		0	O	O	O	p.123
UF-34	0h1A22	User Function Input 7-C	0~0xFFFF		0	O	O	O	p.123
UF-35	0h1A23	User Function Output 7	-32767~32767		0	-	O	O	p.123
UF-36	0h1A24	User Function 8	0	NOP	0:NOP	O	O	O	p.123
			1	ADD					
			2	SUB					
			3	ADDSUB					
			4	MIN					
			5	MAX					
			6	ABS					
			7	NEGATE					
			8	MPYDIV					
			9	REMAINDER					
			10	COMPARE-GT					
			11	COMPARE-GEQ					
			12	COMPARE-EQUAL					
			13	COMPARE-NEQUAL					
			14	TIMER					

Code	Comm-Address	Name	Setting Range		Initial Value	Property*	V/F	SL	Ref.
			15	LIMIT					
			16	AND					
			17	OR					
			18	XOR					
			19	ANDOR					
			20	SWITCH					
			21	BITTEST					
			22	BITSET					
			23	BITCLEAR					
			24	LOWPASSFILTER					
			25	PI_CONTORL					
			26	PI_PROCESS					
			27	UPCOUNT					
			28	DOWNCONUT					
UF-37	0h1A25	User Function Input 8-A	0~0xFFFF		0	O	O	O	p.123
UF-38	0h1A26	User Function Input 8-B	0~0xFFFF		0	O	O	O	p.123
UF-39	0h1A27	User Function Input 8-C	0~0xFFFF		0	O	O	O	p.123
UF-40	0h1A28	User Function Output 8	-32767~32767		0	-	O	O	p.123
UF-41	0h1A29	User Function Output 9	0	NOP	0:NOP	O	O	O	p.123
			1	ADD					
			2	SUB					
			3	ADDSUB					
			4	MIN					
			5	MAX					
			6	ABS					
			7	NEGATE					
			8	MPYDIV					
			9	REMAINDER					
			10	COMPARE-GT					
			11	COMPARE-GEQ					

Code	Comm-Address	Name	Setting Range		Initial Value	Property*	V/F	SL	Ref.
			12	COMPARE-EQUAL					
			13	COMPARE-NEQUAL					
			14	TIMER					
			15	LIMIT					
			16	AND					
			17	OR					
			18	XOR					
			19	ANDOR					
			20	SWITCH					
			21	BITTEST					
			22	BITSET					
			23	BITCLEAR					
			24	LOWPASSFILTER					
			25	PI_CONTORL					
			26	PI_PROCESS					
			27	UPCOUNT					
			28	DOWNCONUT					
UF-42	0h1A2A	User Function Input 9-A	0~0xFFFF		0	O	O	O	p.123
UF-43	0h1A2B	User Function Input 9-B	0~0xFFFF		0	O	O	O	p.123
UF-44	0h1A2C	User Function Input 9-C	0~0xFFFF		0	O	O	O	p.123
UF-45	0h1A2D	User Function Output 9	-32767~32767		0	-	O	O	p.123
UF-46	0h1A2E	User Function Output 10	0	NOP	0:NOP	O	O	O	p.123
			1	ADD					
			2	SUB					
			3	ADDSUB					
			4	MIN					
			5	MAX					
			6	ABS					
			7	NEGATE					

Code	Comm-Address	Name	Setting Range		Initial Value	Property*	V/F	SL	Ref.
			8	MPYDIV					
			9	REMAINDER					
			10	COMPARE-GT					
			11	COMPARE-GEQ					
			12	COMPARE-EQUAL					
			13	COMPARE-NEQUAL					
			14	TIMER					
			15	LIMIT					
			16	AND					
			17	OR					
			18	XOR					
			19	ANDOR					
			20	SWITCH					
			21	BITTEST					
			22	BITSET					
			23	BITCLEAR					
			24	LOWPASSFILTER					
			25	PI_CONTORL					
			26	PI_PROCESS					
			27	UPCOUNT					
			28	DOWNCONUT					
UF-47	0h1A2F	User Function Input 10-A	0~0xFFFF		0	O	O	O	**p.123**
UF-48	0h1A30	User Function Input 10-B	0~0xFFFF		0	O	O	O	**p.123**
UF-49	0h1A31	User Function Input 10-C	0~0xFFFF		0	O	O	O	**p.123**
UF-50	0h1A32	User Function Output 10	-32767~32767		0	-	O	O	**p.123**
UF-51	0h1A33	User Function 11	0	NOP	0:NOP	O	O	O	**p.123**
			1	ADD					
			2	SUB					
			3	ADDSUB					

Code	Comm-Address	Name	Setting Range		Initial Value	Property*	V/F	SL	Ref.
			4	MIN					
			5	MAX					
			6	ABS					
			7	NEGATE					
			8	MPYDIV					
			9	REMAINDER					
			10	COMPARE-GT					
			11	COMPARE-GEQ					
			12	COMPARE-EQUAL					
			13	COMPARE-NEQUAL					
			14	TIMER					
			15	LIMIT					
			16	AND					
			17	OR					
			18	XOR					
			19	ANDOR					
			20	SWITCH					
			21	BITTEST					
			22	BITSET					
			23	BITCLEAR					
			24	LOWPASSFILTER					
			25	PI_CONTORL					
			26	PI_PROCESS					
			27	UPCOUNT					
			28	DOWNCONUT					
UF-52	0h1A34	User Function Input 11-A	0~0xFFFF		0	O	O	O	p.123
UF-53	0h1A35	User Function Input 11-B	0~0xFFFF		0	O	O	O	p.123
UF-54	0h1A36	User Function Input 11-C	0~0xFFFF		0	O	O	O	p.123

Code	Comm-Address	Name	Setting Range		Initial Value	Property*	V/F	SL	Ref.
UF-55	0h1A37	User Function Output 11	-32767~32767		0	-	O	O	p.123
UF-56	0h1A38	User Function 12	0	NOP	0:NOP	O	O	O	p.123
			1	ADD					
			2	SUB					
			3	ADDSUB					
			4	MIN					
			5	MAX					
			6	ABS					
			7	NEGATE					
			8	MPYDIV					
			9	REMAINDER					
			10	COMPARE-GT					
			11	COMPARE-GEQ					
			12	COMPARE-EQUAL					
			13	COMPARE-NEQUAL					
			14	TIMER					
			15	LIMIT					
			16	AND					
			17	OR					
			18	XOR					
			19	ANDOR					
			20	SWITCH					
			21	BITTEST					
			22	BITSET					
			23	BITCLEAR					
			24	LOWPASSFILTER					
			25	PI_CONTORL					
			26	PI_PROCESS					
			27	UPCOUNT					
			28	DOWNCONUT					
UF-57	0h1A39	User Function Input 12-A	0~0xFFFF		0	O	O	O	p.123

Code	Comm-Address	Name	Setting Range		Initial Value	Property*	V/F	SL	Ref.
UF-58	0h1A3A	User Function Input 12-B	0~0xFFFF		0	O	O	O	p.123
UF-59	0h1A3B	User Function Input 12-C	0~0xFFFF		0	O	O	O	p.123
UF-60	0h1A3C	User Function Output 12	-32767~32767		0	-	O	O	p.123
UF-61	0h1A3D	User Function 13	0	NOP	0:NOP	O	O	O	p.123
			1	ADD					
			2	SUB					
			3	ADDSUB					
			4	MIN					
			5	MAX					
			6	ABS					
			7	NEGATE					
			8	MPYDIV					
			9	REMAINDER					
			10	COMPARE-GT					
			11	COMPARE-GEQ					
			12	COMPARE-EQUAL					
			13	COMPARE-NEQUAL					
			14	TIMER					
			15	LIMIT					
			16	AND					
			17	OR					
			18	XOR					
			19	ANDOR					
			20	SWITCH					
			21	BITTEST					
			22	BITSET					
			23	BITCLEAR					
			24	LOWPASSFILTER					
			25	PI_CONTORL					
			26	PI_PROCESS					

Code	Comm-Address	Name	Setting Range		Initial Value	Property*	V/F	SL	Ref.
			27	UPCOUNT					
			28	DOWNCONUT					
UF-62	0h1A3E	User Function Input 13-A	0~0xFFFF		0	O	O	O	p.123
UF-63	0h1A3F	User Function Input 13-B	0~0xFFFF		0	O	O	O	p.123
UF-64	0h1A40	User Function Input 13-C	0~0xFFFF		0	O	O	O	p.123
UF-65	0h1A41	User Function Output 13	-32767~32767		0	-	O	O	p.123
UF-66	0h1A42	User Function 14	0	NOP	0:NOP	O	O	I/P	p.123
			1	ADD					
			2	SUB					
			3	ADDSUB					
			4	MIN					
			5	MAX					
			6	ABS					
			7	NEGATE					
			8	MPYDIV					
			9	REMAINDER					
			10	COMPARE-GT					
			11	COMPARE-GEQ					
			12	COMPARE-EQUAL					
			13	COMPARE-NEQUAL					
			14	TIMER					
			15	LIMIT					
			16	AND					
			17	OR					
			18	XOR					
			19	ANDOR					
			20	SWITCH					
			21	BITTEST					
			22	BITSET					

Code	Comm-Address	Name	Setting Range		Initial Value	Property*	V/F	SL	Ref.
			23	BITCLEAR					
			24	LOWPASSFILTER					
			25	PI_CONTORL					
			26	PI_PROCESS					
			27	UPCOUNT					
			28	DOWNCONUT					
UF-67	0h1A43	User Function Input 14-A	0~0xFFFF		0	O	O	O	p.123
UF-68	0h1A44	User Function Input 14-B	0~0xFFFF		0	O	O	O	p.123
UF-69	0h1A45	User Function Input 14-C	0~0xFFFF		0	O	O	O	p.123
UF-70	0h1A46	User Function Output 14	-32767~32767		0	-	O	O	p.123
UF-71	0h1A47	User Function 15	0	NOP	0:NOP	O	O	O	p.123
			1	ADD					
			2	SUB					
			3	ADDSUB					
			4	MIN					
			5	MAX					
			6	ABS					
			7	NEGATE					
			8	MPYDIV					
			9	REMAINDER					
			10	COMPARE-GT					
			11	COMPARE-GEQ					
			12	COMPARE-EQUAL					
			13	COMPARE-NEQUAL					
			14	TIMER					
			15	LIMIT					
			16	AND					
			17	OR					
			18	XOR					

Code	Comm-Address	Name	Setting Range		Initial Value	Property*	V/F	SL	Ref.
			19	ANDOR					
			20	SWITCH					
			21	BITTEST					
			22	BITSET					
			23	BITCLEAR					
			24	LOWPASSFILTER					
			25	PI_CONTORL					
			26	PI_PROCESS					
			27	UPCOUNT					
			28	DOWNCONUT					
UF-72	0h1A48	User Function Input 15-A	0~0xFFFF		0	O	O	O	p.123
UF-73	0h1A49	User Function Input 15-B	0~0xFFFF		0	O	O	O	p.123
UF-74	0h1A4A	User Function Input 15-C	0~0xFFFF		0	O	O	O	p.123
UF-75	0h1A4B	User Function Output 15	-32767~32767		0	-	O	O	p.123
UF-76	0h1A4C	User Function 16	0	NOP	0:NOP	O	O	O	p.123
			1	ADD					
			2	SUB					
			3	ADDSUB					
			4	MIN					
			5	MAX					
			6	ABS					
			7	NEGATE					
			8	MPYDIV					
			9	REMAINDER					
			10	COMPARE-GT					
			11	COMPARE-GEQ					
			12	COMPARE-EQUAL					
			13	COMPARE-NEQUAL					
			14	TIMER					

Code	Comm-Address	Name	Setting Range		Initial Value	Property*	V/F	SL	Ref.
			15	LIMIT					
			16	AND					
			17	OR					
			18	XOR					
			19	ANDOR					
			20	SWITCH					
			21	BITTEST					
			22	BITSET					
			23	BITCLEAR					
			24	LOWPASSFILTER					
			25	PI_CONTORL					
			26	PI_PROCESS					
			27	UPCOUNT					
			28	DOWNCONUT					
UF-77	0h1A4D	User Function Input 16-A	0~0xFFFF		0	O	O	O	p.123
UF-78	0h1A4E	User Function Input 16-B	0~0xFFFF		0	O	O	O	p.123
UF-79	0h1A4F	User Function Input 16-C	0~0xFFFF		0	O	O	O	p.123
UF-80	0h1A50	User Function 16	-32767~32767		0	-	O	O	p.123
UF-81	0h1A51	User Function 17	0	NOP	0:NOP	O	O	O	p.123
			1	ADD					
			2	SUB					
			3	ADDSUB					
			4	MIN					
			5	MAX					
			6	ABS					
			7	NEGATE					
			8	MPYDIV					
			9	REMAINDER					
			10	COMPARE-GT					
			11	COMPARE-GEQ					

Code	Comm-Address	Name	Setting Range		Initial Value	Property*	V/F	SL	Ref.
			12	COMPARE-EQUAL					
			13	COMPARE-NEQUAL					
			14	TIMER					
			15	LIMIT					
			16	AND					
			17	OR					
			18	XOR					
			19	ANDOR					
			20	SWITCH					
			21	BITTEST					
			22	BITSET					
			23	BITCLEAR					
			24	LOWPASSFILTER					
			25	PI_CONTORL					
			26	PI_PROCESS					
			27	UPCOUNT					
			28	DOWNCONUT					
UF-82	0h1A52	User Function Input 17-A	0~0xFFFF		0	O	O	O	p.123
UF-83	0h1A53	User Function Input 17-B	0~0xFFFF		0	O	O	O	p.123
UF-84	0h1A54	User Function Input 17-C	0~0xFFFF		0	O	O	O	p.123
UF-85	0h1A55	User Function Output 17	-32767~32767		0	-	O	O	p.123
UF-86	0h1A56	User Function 18	0	NOP	0:NOP	O	O	O	p.123
			1	ADD					
			2	SUB					
			3	ADDSUB					
			4	MIN					
			5	MAX					
			6	ABS					
			7	NEGATE					

Code	Comm-Address	Name	Setting Range		Initial Value	Property*	V/F	SL	Ref.
			8	MPYDIV					
			9	REMAINDER					
			10	COMPARE-GT					
			11	COMPARE-GEQ					
			12	COMPARE-EQUAL					
			13	COMPARE-NEQUAL					
			14	TIMER					
			15	LIMIT					
			16	AND					
			17	OR					
			18	XOR					
			19	ANDOR					
			20	SWITCH					
			21	BITTEST					
			22	BITSET					
			23	BITCLEAR					
			24	LOWPASSFILTER					
			25	PI_CONTORL					
			26	PI_PROCESS					
			27	UPCOUNT					
			28	DOWNCONUT					
UF-87	0h1A57	User Function Input 18-A	0~0xFFFF		0	O	O	O	p.123
UF-88	0h1A58	User Function Input 18-B	0~0xFFFF		0	O	O	O	p.123
UF-89	0h1A59	User Function Input 18-C	0~0xFFFF		0	O	O	O	p.123
UF-90	0h1A5A	User Function Output 18	-32767~32767		0	-	O	O	p.123

9 Troubleshooting

This chapter explains how to troubleshoot a problem when inverter protective functions, fault trips, warning signals, or a fault occurs. If the inverter does not work normally after following the suggested troubleshooting steps, please contact the LS ELECTRIC customer service center.

9.1 Trip and Warning

When the inverter detects a fault, it stops the operation (trips) or sends out a warning signal. When a trip or warning occurs, trip information and warning information will be briefly displayed on the keypad. Users can read the warning message at Pr.90. If two or more trips occur, the trip information with a higher priority will be displayed first on the keypad.

The fault conditions can be categorized as follows:

- Level: When the fault is corrected, the trip or warning signal disappears and the fault is not saved in the fault history.
- Latch: When the fault is corrected and a reset input signal is provided, the trip or warning signal disappears.
- Fatal: When the fault is corrected, the fault trip or warning signal disappears only after the user turns off the inverter, waits until the charge indicator light goes off, and turns the inverter on again. If the inverter is still in a fault condition after powering it on again, please contact the supplier or the LS ELECTRIC customer service center.

9.1.1 Fault Trips

Protection Functions for Output Current and Input Voltage

Keypad Display	Name	Type	Description
OLt	Over Load	Latch	Displayed when the motor overload trip is activated and the actual load level exceeds the set level. Operates when Pr.20 is set to a value other than 0.
ULt	Under Load	Latch	Displayed when the motor underload trip is activated and the actual load level is less than the set level. Operates when Pr.27 is set to a value other than 0.

Keypad Display	Name	Type	Description
OCt	Over Current1	Latch	Displayed when inverter output current exceeds the specified value.
Out	Over Voltage	Latch	Displayed when internal DC circuit voltage exceeds the specified value.
Lvt	Low Voltage	Level	Displayed when internal DC circuit voltage is less than the specified value.
Lv2	Low Voltage2	Latch	Displayed when internal DC circuit voltage is less than the specified value during inverter operation. Operates when Pr.82 is set to 1.
GFt	Ground Trip*	Latch	Displayed when a ground fault trip occurs on the output side of the inverter and causes the current to exceed the specified value. The specified value varies depending on inverter capacity.(For 200V 2.2kW/4kW products, check if there is an input phase loss when GFT occurs.)
EtH	E-Thermal	Latch	Displayed based on inverse time-limit thermal characteristics to prevent motor overheating. Operates when Pr.40 is set to a value other than 0.
POt	Out Phase Open	Latch	Displayed when a 3-phase inverter output has one or more phases in an open circuit condition. Operates when bit 1 of Pr.05 is set to 1.
IPO	In Phase Open	Latch	Displayed when a 3-phase inverter input has one or more phases in an open circuit condition. Operates only when bit 2 of Pr.05 is set to 1.
IOL	Inverter OLT	Latch	Displayed when the inverter has been protected from overload and resultant overheating, based on inverse time-limit thermal characteristics. Allowable overload rates for the inverter are 150% for 1 min and 200% for 4 sec (120% for 1 minute, 200% for 2 seconds with low load). Protection is based on inverter rated capacity, and may vary depending on the device's capacity.
nMt	No Motor Trip	Latch	Displayed when the motor is not connected during inverter operation. Operates when Pr.31 is set to 1.
rOt	Relay Open Trip	Latch	Occurs when the DC voltage relay is not operating when power is input. The Pr.90 code must be set to 1 to operate. Detected only in 1.5/2.2/4.0kW-4 capacities. (The Relay Open Trip(ROT) feature is not provided in G100C)
Otd1	Over torque trip1	Latch	Occurs when the output current is higher than the level set in Ou.68. Operates when OU.67 is set to 3, 4.

Keypad Display	Name	Type	Description
Otd2	Over torque trip2	Latch	Occurs when the output current is higher than the level set in OU.71. Operates when OU.70 is set to 3, 4.
Utd1	Under torque trip1	Latch	Occurs when the output current is lower than the level set in OU.68. Operates when OU.67 is set to 7, 8.
Utd2	Under torque trip2	Latch	Occurs when the output current is lower than the level set in OU.71. Operates when OU.70 is set to 7, 8.

* The Ground Trip (GFT) feature is not provided in products under 4.0 kW except for 4.0 kW 200 V and 2.2 kW 200 V. An over current trip (OCT) or over voltage trip (OVT) may occur during low resistance grounding.

Protection Functions Using Abnormal Internal Circuit Conditions and External Signals

Keypad Display	Name	Type	Description
OHt	Over Heat	Latch	Displayed when the temperature of the inverter heat sink exceeds the specified value.
OC2	Over Current2	Latch	Displayed when the DC circuit in the inverter detects a specified level of excessive, short circuit current.
EHt	External Trip	Latch	Displayed when an external fault signal is provided by the multi-function terminal. Set one of the multi-function input terminals at In.65–72 to 4 (External Trip) to enable external trip.
bH	BX	Level	Displayed when the inverter output is blocked by a signal provided from the multi-function terminal. Set one of the multi-function input terminals at In.65–72 to 5 (BX) to enable input block function.
bb	Base Block	Level	Displayed when the inverter output is blocked by a signal provided from the multi-function terminal. Set one of the multi-function input terminals at In.65-72 to 33(Base Block) to enable input block function.

Keypad Display	Name	Type	Description
H_W_t	H/W-Diag	Fatal	Displayed when an error is detected in the memory (EEPRom), analog-digital converter output (ADC Off Set), or CPU watchdog (Watch Dog-1, Watch Dog-2). • **EEP Err:** An error in reading/writing parameters due to keypad or memory (EEPRom) fault. • **ADC Off Set:** An error in the current sensing circuit (U/V/W terminal, current sensor, etc.).
ntC	NTC Open	Latch	Displayed when an error is detected in the temperature sensor of the Insulated Gate Bipolar Transistor (IGBT).
FAn	Fan Trip	Latch	Displayed when an error is detected in the cooling fan. Set Pr.79 to 0 to activate fan trip.
PI d	Pre-PID Fail	Latch	Displayed when pre-PID is operating with functions set at AP.34–AP.36. A fault trip occurs when a controlled variable (PID feedback) is measured below the set value and the low feedback continues, as it is treated as a load fault.
ebr	Ext-Brake	Latch	Operates when the external brake signal is provided by the multi-function terminal. Occurs when the inverter output starting current remains below the set value at Ad.41. Set either OU.31 or OU.32 to 35 (BR Control).
OH	Overheat Pre-Alarm	Latch	When the user has set Pr.78 to 2: Free-Run or 3: Dec, pre-overheating warning trip of inverter occurs if the inverter temperature exceeds the temperature set by the user in Pr.77.
PtC	PTC Trip	Latch	If Pr.35 is selected as 0 (PTC), PTC trip occurs when the temperature of the selected PTC model is exceeded for a sustained period of 60 seconds. If Pr.35 is selected as 1 (PT1000), PTC trip occurs when the temperature set by Pr.37 is exceeded for 60 seconds.
SFA	SFA Trip	Latch	SFA trip occurs when the safety input signal between SA - SC is open.
SFb	SFB Trip	Latch	SFB trip occurs when the safety input signal between SB - SC is open.

Protection Functions for Communication Options

Keypad Display	Name	Type	Description
LOr	Lost Command	Level	Displayed when a frequency or operation command error is detected during inverter operation by controllers other than the keypad (e.g., using a terminal block and a communication mode). Operates when Pr.12 is set to a value other than 0.
OLOr	Option Lost Command	Level	Displayed when frequency or operation command error is detected during inverter operation by communication options. Operates when Pr.68 is set to a value other than 0.
IOt HOLd	IO Board Trip	Latch	Displayed when the I/O board or external communication card is not connected to the inverter or there is a bad connection.
ErrC			Displayed when the HOLd error code continues for more than 5 sec. (‘Errc’ -> ’-rrc’ -> ‘E-rc’ -> ’Er-c’ -> ‘Err-‘ -> ’- -rc’ -> ‘Er- -‘ -> ’- - - -‘ -> ’Errc’ -> …)
OPt	Option Trip-1	Latch	Displayed when a communication error is detected between the inverter and the communication board. Occurs when the communication option card is installed.

9.1.2 Warning Messages

Keypad Display	Name	Description
OLW	Over Load	Displayed when the motor is overloaded. Operates when Pr.17 is set to 1. To operate, select 5. Set the digital output terminal or relay (OU.31 or OU.33) to 5 (Over Load) to receive overload warning output signals.
ULW	Under Load	Displayed when the motor is underloaded. Operates when Pr.25 is set to 1. Set the digital output terminal or relay (OU.31 or OU.33) to 7 (Under Load) to receive underload warning output signals.
IOLW	INV Over Load	Displayed when the overload time equivalent to 60% of the inverter overheat protection (inverter IOL) level, is accumulated. Set the digital output terminal or relay

Keypad Display	Name	Description
		(OU.31 or OU.33) to 6 (IOL) to receive inverter overload warning output signals.
LCW	Lost Command	Lost command warning alarm occurs even with Pr.12 set to 0. The warning alarm occurs based on the condition set at Pr.13– 15. Set the digital output terminal or relay (OU.31 or OU.33) to 13 (Lost Command) to receive lost command warning output signals. If the communication settings and status are not suitable for P2P, a Lost Command alarm occurs.
EFAn	Fan Exchange	An alarm occurs when the value set at Pr.86 is less than the value set at Pr.87. To receive fan exchange output signals, set the digital output terminal or relay (OU.31 or OU.33) to 37 (Fan Exchange).
FAnW	Fan Warning	Displayed when an error is detected from the cooling fan while Pr.79 is set to 1. Set the digital output terminal or relay (OU.31 or OU.33) to 8 (Fan Warning) to receive fan warning output signals.
dbW	DB Warn%ED	Displayed when the DB resistor usage rate exceeds the set value. Set the detection level at Pr.66.
trEr	Retry Tr Tune	Operates when dr.9 is set to 4. The warning alarm occurs when the motor's rotor time constant (Tr) is either too low or too high.
OH	Overheat Pre Alarm	When the user has set Pr78 to 1: Warning, pre-overheating warning of inverter occurs if the inverter temperature exceeds the temperature set by the user in Pr.77.
SLP	PID Sleep Warning	The warning alarm occurs When PID operation sleep mode.
PtC	PTC Warning	When Pr.34 is set to 1(Warning), a PTC trip occurs if the fault temperature is continuously exceeded for 60 seconds.(flashing)
FI dL	Comm Idle Sts	Occurs when the parent controller is in the Idle state.

9.2 Troubleshooting Fault Trips

When a fault trip or warning occurs due to a protection function, refer to the following table for possible causes and remedies.

Items	Cause	Remedy
OLT	The load is greater than the motor's rated capacity.	Replace the motor and inverter with models that have increased capacity.
	The set value for the overload trip	Increase the set value for the

Items	Cause	Remedy
	level (Pr.21) is too low.	overload trip level.
ULT	There is a motor-load connection problem.	Replace the motor and inverter with models with lower capacity.
	The set value for underload level (Pr.29, Pr.30) is less than the system's minimum load.	Reduce the set value for the underload level.
OCT	Acc/Dec time is too short, compared to load inertia (GD2).	Increase Acc/Dec time.
	The inverter load is greater than the rated capacity.	Replace the inverter with a model that has increased capacity.
	The inverter supplied an output while the motor was idling.	Operate the inverter after the motor has stopped or use the speed search function (Cn.60).
	The mechanical brake of the motor is operating too fast.	Check the mechanical brake.
	A ground fault has occurred in the inverter output wiring.	Check the output wiring.
	The motor insulation is damaged.	Replace the motor.
OVT	Deceleration time is too short for the load inertia (GD2).	Increase the deceleration time.
	A generative load occurs at the inverter output.	Use the braking unit.
	The input voltage is too high.	Determine if the input voltage is above the specified value.
	A ground fault has occurred in the inverter output wiring.	Check the output wiring.
	The motor insulation is damaged.	Replace the motor.
LVT	The input voltage is too low.	Determine if the input voltage is below the specified value.
	A load greater than the power capacity is connected to the system (e.g., a welder, direct motor connection, etc.).	Increase the power capacity.
	The magnetic contactor connected to the power source has a faulty connection.	Replace the magnetic contactor.
LV2	The input voltage has decreased during operation.	Determine if the input voltage is below the specified value.
	An input open-phase has occurred when input voltage is low.	Check the input wiring.
	The magnetic contactor connected to the power source has a faulty connection.	Replace the magnetic contactor.

Items	Cause	Remedy
GFT	A ground fault has occurred in the inverter output wiring.	Check the output wiring.
	The motor insulation is damaged.	Replace the motor.
ETH	The motor has overheated.	Reduce the load or operation frequency.
	The inverter load is greater than the rated capacity.	Replace the inverter with a model that has increased capacity.
	The set value for electronic thermal protection is too low.	Set an appropriate electronic thermal prevention (ETH) level.
	The inverter has been operated at low speed for an extended duration.	Replace the motor with a model that supplies extra power to the cooling fan.
POT	The magnetic contactor on the output side has a connection fault.	Check the magnetic contactor on the output side.
	The output wiring is faulty.	Check the output wiring.
IPO	The magnetic contactor on the input side has a connection fault.	Check the magnetic contactor on the input side.
	The input wiring is faulty.	Check the input wiring.
	The DC link capacitor needs to be replaced.	Replace the DC link capacitor. Contact the retailer or the LS ELECTRIC customer service center.
IOL	The load is greater than the rated motor capacity.	Replace the motor and inverter with models that have increased capacity.
	The torque boost level is too high.	Reduce the torque boost level.
OHT	There is a problem with the cooling system.	Determine if a foreign object is obstructing the air inlet, outlet, or vent.
	The inverter cooling fan has been operated for an extended period.	Replace the cooling fan.
	The ambient temperature is too high.	Keep the ambient temperature below 50℃.
OC2	Output wiring is short-circuited.	Check the output wiring.
	There is a fault with the electronic semiconductor (IGBT).	Do not operate the inverter. Contact the retailer or the LS ELECTRIC customer service center.
	A ground fault has occurred in the inverter output wiring.	Check the output wiring.
	The motor insulation is damaged.	Replace the motor.

Items	Cause	Remedy
NTC	The ambient temperature is too low.	Keep the ambient temperature above –10℃.
	There is a fault with the internal temperature sensor.	Contact the retailer or the LS ELECTRIC customer service center.
FAN	A foreign object is obstructing the fan's air vent.	Remove the foreign object from the air inlet or outlet.
	The cooling fan needs to be replaced.	Replace the cooling fan.

9.3 Other Faults

When a fault other than those identified as fault trips or warnings occurs, refer to the following table for possible causes and remedies.

Items	Cause	Remedy
Parameters cannot be set.	The inverter is in operation (driving mode).	Stop the inverter to change to program mode and set the parameter.
	The parameter access is incorrect.	Check the correct parameter access level and set the parameter.
	The password is incorrect.	Check the password, disable the parameter lock and set the parameter.
	Low voltage is detected.	Check the power input to resolve the low voltage and set the parameter.
The motor does not rotate.	The frequency command source is set incorrectly.	Check the frequency command source setting.
	The operation command source is set incorrectly.	Check the operation command source setting.
	Power is not supplied to the terminal R/S/T.	Check the terminal connections R/S/T and U/V/W.
	The charge lamp is turned off.	Turn on the inverter.
	The operation command is off.	Turn on the operation command (RUN).
	The motor is locked.	Unlock the motor or lower the load level.
	The load is too high.	Operate the motor independently.
	An emergency stop signal is input.	Reset the emergency stop signal.
	The wiring for the control circuit terminal is incorrect.	Check the wiring for the control circuit terminal.

Items	Cause	Remedy
	The input option for the frequency command is incorrect.	Check the input option for the frequency command.
	The input voltage or current for the frequency command is incorrect.	Check the input voltage or current for the frequency command.
	The PNP/NPN mode is selected incorrectly.	Check the PNP/NPN mode setting.
	The frequency command value is too low.	Check the frequency command and input a value above the minimum frequency.
	The [STOP/RESET] key is pressed.	Check that the stoppage is normal, if so resume operation normally.
	Motor torque is too low.	Change the operation modes (V/F, IMSensorless). If the fault remains, replace the inverter with a model with increased capacity.
The motor rotates in the opposite direction to the command.	The wiring for the motor output cable is incorrect.	Determine if the cable on the output side is wired correctly to the phase (U/V/W) of the motor.
	The signal connection between the control circuit terminal (forward/reverse rotation) of the inverter and the forward/reverse rotation signal on the control panel side is incorrect.	Check the forward/reverse rotation wiring.
The motor only rotates in one direction.	Reverse rotation prevention is selected.	Remove the reverse rotation prevention.
	The reverse rotation signal is not provided, even when a 3-wire sequence is selected.	Check the input signal associated with the 3-wire operation and adjust as necessary.
The motor is overheating.	The load is too high.	Reduce the load. Increase Acc/Dec time.
		Check the motor parameters and set the correct values.
		Replace the motor and the inverter with models with appropriate capacity for the load.
	The ambient temperature of the motor is too high.	Lower the ambient temperature of the motor.
	The phase-to-phase voltage of the motor is insufficient.	Use a motor that can withstand phase-to-phase voltages surges greater than the maximum surge voltage.
		Only use motors suitable for applications with inverters.

Items	Cause	Remedy
		Connect the AC reactor to the inverter output (set the carrier frequency to 2 kHz).
	The motor fan has stopped or the fan is obstructed with debris.	Check the motor fan and remove any foreign objects.
The motor stops during acceleration or when connected to load.	The load is too high.	Reduce the load.
		Replace the motor and the inverter with models with appropriate capacity for the load.
The motor does not accelerate. /The acceleration time is too long.	The frequency command value is low.	Set an appropriate value.
	The load is too high.	Reduce the load. Increase the acceleration time. Check the mechanical brake status.
	The acceleration time is too long.	Change the acceleration time.
	The combined values of the motor properties and the inverter parameter are incorrect.	Change the motor related parameters.
	The stall prevention level during acceleration is low.	Change the stall prevention level.
	The stall prevention level during operation is low.	Change the stall prevention level.
	Starting torque is insufficient.	Change to vector control operation mode. If the fault remains, replace the inverter with a model with increased capacity.
Motor speed varies during operation.	There is a high variance in load.	Replace the motor and inverter with models that have increased capacity.
	The input voltage varies.	Reduce input voltage variation.
	Motor speed variations occur at a specific frequency.	Adjust the output frequency to avoid a resonance area.
The motor rotation is different from the setting.	The V/F pattern is set incorrectly.	Set a V/F pattern that is suitable for the motor specification.

Items	Cause	Remedy
The motor deceleration time is too long even with Dynamic Braking (DB) resistor connected.	The deceleration time is set too long.	Change the setting accordingly.
	The motor torque is insufficient.	If motor parameters are normal, it is likely to be a motor capacity fault.
	Replace the motor with a model with increased capacity.	Replace the inverter with a model that has increased capacity.
Operation is difficult in underload applications.	The carrier frequency is too high.	Reduce the carrier frequency.
	Over-excitation has occurred due to an inaccurate V/F setting at low speed.	Reduce the torque boost value to avoid over-excitation.
While the inverter is in operation, a control unit malfunctions or noise occurs.	Noise occurs due to switching inside the inverter.	Change the carrier frequency to the minimum value.
		Install a micro surge filter in the inverter output.
When the inverter is operating, the earth leakage breaker is activated.	An earth leakage breaker will interrupt the supply if current flows to ground during inverter operation.	Connect the inverter to a ground terminal.
		Check that the ground resistance is less than 100Ω for 200 V inverters and less than 10Ω for 400 V inverters.
		Check the capacity of the earth leakage breaker and make the appropriate connection, based on the rated current of the inverter.
		Reduce the carrier frequency.
		Make the cable length between the inverter and the motor as short as possible.
The motor vibrates severely and does not rotate normally.	The voltage between phases is badly balanced.	Check the input voltage and balance the voltage.
		Check and test the motor's insulation.

Items	Cause	Remedy
The motor makes humming, or loud noises.	Resonance occurs between the motor's natural frequency and the carrier frequency.	Slightly increase or decrease the operating frequency.
	Resonance occurs between the motor's natural frequency and the inverter’s output frequency.	Slightly increase or decrease the carrier frequency.
		Use the frequency jump function to avoid the frequency band where resonance occurs.
The motor vibrates/hunts.	The frequency input command is an external, analog command.	In situations of noise inflow on the analog input side that results in command interference, change the input filter time constant (In.07).
	The wiring length between the inverter and the motor is too long.	Ensure that the total cable length between the inverter and the motor is less than 200 m (50 m for motors rated 3.7 kW or lower).
The motor does not come to a complete stop when the inverter output stops.	It is difficult to decelerate sufficiently, because DC braking is not operating normally.	Adjust the DC braking parameter.
		Increase the set value for the DC braking current.
		Increase the set value for the DC braking stopping time.
The output frequency does not increase to the frequency reference.	The frequency reference is within the jump frequency range.	Set the frequency reference higher than the jump frequency range.
	The frequency reference is exceeding the upper limit of the frequency command.	Set the upper limit of the frequency command higher than the frequency reference.
	Because the load is too heavy, the stall prevention function is working.	Replace the inverter with a model that has increased capacity.
The cooling fan does not rotate.	The control parameter for the cooling fan is set incorrectly.	Check the control parameter setting for the cooling fan.
The motor stops in case of lightning.	The product may be reset or a trip (OCT, OC2, OVT) may occur due to lightning.	Restart after checking the peripheral devices of the inverter.

10 Maintenance

This chapter explains how to replace the cooling fan, the regular inspections to complete, and how to store and dispose of the product. An inverter is vulnerable to environmental conditions and faults also occur due to component wear and tear. To prevent breakdowns, please follow the maintenance recommendations in this section.

Caution

- Before you inspect the product, read all safety instructions contained in this manual.
- Before you clean the product, ensure that the power is off.
- Clean the inverter with a dry cloth. Cleaning with wet cloths, water, solvents, or detergents may result in electric shock or damage to the product.

10.1 Regular Inspection Lists

10.1.1 Daily Inspections

Inspection Area	Inspection Item	Inspection Details	Inspection Method	Judgment Standard	Inspection Equipment
All	Environmental factors	Is the ambient temperature and humidity within the design range, and is there any dust or foreign objects present?	Refer to **1.3 Installation Considerations** on page **7**.	There must be no danger of freezing with ambient temperature of -10~40˚C and must be no condensation with ambient humidity of less than 95%.	Thermometer, hygrometer, recorder
	Inverter	Is there any abnormal vibration or noise?	Visual inspection	No abnormality	

Inspection Area	Inspection Item	Inspection Details	Inspection Method	Judgment Standard	Inspection Equipment
	Power voltage	Are the input and output voltages normal?	Measure voltages between R/ S/ T-phases in. the inverter terminal block.	Refer to **11.1 input and Output Specification** on page **360**.	Digital multimeter tester
Input/Output circuit	Smoothing capacitor	Is there any leakage from the inside?	Visual inspection	No abnormality	-
		Is the capacitor swollen?			
Cooling system	Cooling Fan	Is there any abnormal vibration or noise?	Turn off the system and check operation by rotating the fan manually.	Fan rotates smoothly	-
Display	Measuring device	Is the display value normal?	Check the display value on the panel.	Check and manage specified values.	Voltmeter, ammeter, etc.
Motor	All	Is there any abnormal vibration or noise?	Visual inspection	No abnormality	-
		Is there any abnormal smell?	Check for overheating or damage.		

10.1.2 Annual Inspections

Inspection Area	Inspection Item	Inspection Details	Inspection Method	Judgment Standard	Inspection Equipment
Input/Output circuit	All	Megger test (between input/output terminals and earth terminal)	Disconnect inverter and short R/S/T/U/V/W terminals, and then measure from each terminal to the ground terminal using a Megger.	Must be above 5 MΩ	DC 500 V Megger
		Is there anything loose in the device?	Tighten up all screws.	No abnormality	
		Is there any evidence of parts overheating?	Visual inspection		
	Connection conductor /cable	Are there any corroded cables?	Visual inspection	No abnormality	-
		Is there any damage to cable insulation?			
	Terminal block	Is there any damage?	Visual inspection	No abnormality	-
	Smoothing capacitor	Measure electrostatic capacity.	Measure with capacity meter.	Rated capacity over 85%	Capacity meter
	Relay	Is there any chattering noise during operation?	Visual inspection	No abnormality	-
		Is there any damage to the contacts?	Visual inspection		
	Braking resistor	Is there any damage from resistance?	Visual inspection	No abnormality	Digital multimeter / analog tester
		Check for disconnection	Disconnect one side and measure with a tester.	Must be within ±10% of the rated value of the resistor.	

Inspection Area	Inspection Item	Inspection Details	Inspection Method	Judgment Standard	Inspection Equipment
Control circuit Protection circuit	Operation check	Check for output voltage imbalance while the inverter is in operation.	Measure voltage between the inverter output terminal U/V/W.	Balance the voltage between phases: within 4 V for 200 V series and within 8 V for 400 V series.	Digital multimeter or DC voltmeter
		Is there an error in the display circuit after the sequence protection test?	Test the inverter output protection in both short and open circuit conditions.	The circuit must work according to the sequence.	
Cooling system	Cooling Fan	Are any of the fan parts loose?	Check the connecting part of the connector.	No abnormality	-
Display	Display device	Is the display value normal?	Check the command value on the display device.	Specified and managed values must match.	Voltmeter, ammeter, etc.

10.1.3 Bi-annual Inspections

Inspection area	Inspection item	Inspection details	Inspection method	Judgment standard	Inspection equipment
Motor	Insulation resistance	Megger test (between the input, output and earth terminals).	Disconnect the cables for terminals U/V/ W and test the wiring.	Must be above 5 MΩ	DC 500 V Megger

Caution

Do not run an insulation resistance test (Megger) on the control circuit as it may result in damage to the product. This may cause damage to the inverter.

10.2 Storage and Disposal

10.2.1 Storage

If you are not using the product for an extended period, store it in the following way:

- Store the product in the same environmental conditions as specified for operation (refer to **1.3 Installation Considerations** on page **7**).
- When storing the product for a period longer than 3 months, store it between -10 ˚C and 30 ˚C, to prevent depletion of the electrolytic capacitor.
- Do not expose the inverter to snow, rain, fog, or dust.
- Package the inverter in a way that prevents contact with moisture. Keep the moisture level below 70% in the package by including a desiccant, such as silica gel.
- Do not leave the inverter in a humid or dusty environment (e.g. Used as a device or control panel at a construction site). Disassemble the product and store in a place that is suitable for operation.

10.2.2 Disposal

When disposing of the product, categorize it as general industrial waste. The product contains materials that can be recycled. Please consider the environment, energy, and resources and recycle unused products. The packing materials and all metal parts can be recycled. Although plastic can also be recycled, it can be incinerated under controlled conditions in some regions.

Caution

If the product is left in a prolonged state without a flow of current, the condenser will deteriorate due to its characteristics. To prevent the deterioration of the electrolytic capacitor, turn on the power of inverter at least once a year to apply a current for 30–60 seconds. Run the device under no-load conditions.

11 Technical Specification

11.1 Input and Output Specification

3 Phase 200 V (0.4~7.5 kW)

Model Name LSLVG100(C)-2□□□□			0004	0008	0015	0022	0040	0055	0075
Applied motor	Heavy load	HP	0.5	1.0	2.0	3.0	5.0	7.5	10
		kW	0.4	0.75	1.5	2.2	4.0	5.5	7.5
	Normal load	HP	1.0	2.0	3.0	5.0	7.5	10	15
		kW	0.75	1.5	2.2	4.0	5.5	7.5	11
Rated output	Rated capacity (kVA)	Heavy load	1.0	1.9	3.0	4.2	6.5	9.1	12.2
		Normal load	1.2	2.3	3.7	4.6	6.9	11.4	15.2
	Rated current (A) [3-Phase input]	Heavy load	2.5	5.0	8.0	11.0	17.0	24.0	32.0
		Normal load	3.1	6.0	9.6	12.0	18.0	30.0	40.0
	Rated current (A)/60 Hz [1-Phase input]	Heavy load	1.5	2.8	4.6	6.1	9.3 9.0*	12.8	17.4
		Normal load	2.0	3.6	5.9	6.7	9.8 9.5*	16.3	22.0
	Rated current (A)/50 Hz [1-Phase input]	Heavy load	1.5	2.7	4.5	5.9	9.1	12.4	16.9
		Normal load	1.9	3.5	5.7	6.5	9.5	15.8	21.3
	Output frequency		0–400 Hz(IM Sensorless: 0–120 Hz)						
	Output voltage (V)		3-phase 200–240 V						
Rated input	Working voltage (V)		3-phase 200–240 VAC (-15% to +10%) Single phase 240VAC (-5% to +10%)						
	Input frequency		50–60 Hz (±5%)						
	Rated current (A)	Heavy load	2.2	4.9	8.4	11.8	18.5	25.8	34.9
		Normal load	3.0	6.3	10.3	13.1	19.4	32.7	44.2
Weight (lb/kg)	Non-EMC Filter Type		2.29/1.04	2.34/1.06	3.0/1.36	3.09/1.4	4.17/1.89	6.79/3.08	7.08/3.21
	G100C		1.79/0.81	1.83/0.83	2.4/1.1	2.49/1.13	3.92/1.78	-	-

*G100C 4kW

3 Phase 200 V (11~22kW)

Model Name LSLVG100-2□□□□			0110	0150	0185	0220
Applied motor	Heavy load	HP	15	20	25	30
		kW	11	15	18.5	22
	Normal load	HP	20	25	30	-
		kW	15	18.5	22	-
Rated output	Rated capacity (kVA)	Heavy load	17.9	22.9	28.6	33.5
		Normal load	21.3	26.7	31.2	-
	Rated current (A) [3-Phase input]	Heavy load	47	60	75	88
		Normal load	56	70	82	-
	Rated current (A)/60 Hz [1-Phase input]	Heavy load	26.8	34	41	48
		Normal load	31	38	45	-
	Rated current (A)/50 Hz [1-Phase input]	Heavy load	26	33.1	39.9	46.7
		Normal load	30	36.9	43.7	
	Output frequency		0–400 Hz(IM Sensorless: 0–120 Hz)			
	Output voltage (V)		3-phase 200–240 V			
Rated input	Working voltage (V)		3-phase 200–240 VAC (-15% to +10%) Single phase 240VAC (-5% to +10%)			
	Input frequency		50–60Hz(±5%)			
	Rated current (A)	Heavy load	53.2	68.4	85.5	101.6
		Normal load	63.8	79.8	94.6	-
Weight (lb/kg)	Non-EMC Filter Type		10.7/4.84	16.8/7.6	24.5/11.1	24.7/11.2

- The standard motor capacity is based on a standard 4-pole motor.
- The standard used for 200 V inverters is based on a 220 V supply voltage, and for 400 V inverters is based on a 440 V supply voltage.
- The rated output current is limited based on the carrier frequency set at Cn.04.
- The output voltage becomes 20–40% lower during no-load operations to protect the inverter from the impact of the motor closing and opening (0.4–4.0 kW models only).

3 Phase 400 V (0.4~7.5 kW)

Model Name LSLVG100(C)-4□□□□			0004	0008	0015	0022	0040	0055	0075
Applied motor	Heavy load	HP	0.5	1.0	2.0	3.0	5.0	7.5	10
		kW	0.4	0.75	1.5	2.2	4.0	5.5	7.5
	Normal load	HP	1.0	2.0	3.0	5.0	7.5	10	15
		kW	0.75	1.5	2.2	4.0	5.5	7.5	11
Rated output	Rated capacity (kVA)	Heavy load	1.0	1.9	3.0	4.2	6.9	9.1	12.2
		Normal load	1.5	2.4	3.9	5.3	7.6	12.2	17.5
	Rated current (A) [3-Phase input]	Heavy load	1.3	2.5	4.0	5.5	9.0	12.0	16.0
		Normal load	2.0	3.1	5.1	6.9	10.0	16.0	23.0
	Rated current (A)/60 Hz [1-Phase input]	Heavy load	0.7	1.4	2.1	2.8	4.9	6.4	8.7
		Normal load	1.3	1.9	2.8	3.6	5.4	8.7	12.6
	Rated current (A)/50 Hz [1-Phase input]	Heavy load	0.7	1.4	2.0	2.7	4.8	6.2	8.5
		Normal load	1.3	1.8	2.7	3.5	5.2	8.4	12.2
	Output frequency		0–400 Hz(IM Sensorless: 0–120 Hz)						
	Output voltage (V)		3-phase 380–480 V						
Rated input	Working voltage (V)		3-phase 380–480 VAC (-15% to +10%) Single phase 480VAC (-5% to +10%)						
	Input frequency		50–60 Hz (±5%)						
	Rated current (A)	Heavy load	1.1	2.4	4.2	5.9	9.8	12.9	17.5
		Normal load	2.0	3.3	5.5	7.5	10.8	17.5	25.4
Weight (lb/kg)	Non-EMC Filter Type		2.25/1.02	2.34/1.06	3.09/1.4	3.13/1.42	4.23/1.92	6.79/3.08	6.88/3.12
	EMC Filter Type		2.29/1.04	2.38/1.08	3.17/1.44	3.22/1.46	4.37/1.98	7.14/3.24	7.23/3.28
	G100C		1.81/0.82	1.87/0.85	2.51/1.14	2.51/1.14	3.90/1.77	-	-

3 Phase 400 V (11~22kW)

Model Name LSLVG100-4□□□□			0110	0150	0185	0220
Applied motor	Heavy load	HP	15	20	25	30
		kW	11	15	18.5	22
	Normal load	HP	20	25	30	40
		kW	15	18.5	22	30
Rated output	Rated capacity (kVA)	Heavy load	18.3	23.6	29.7	34.3
		Normal load	23.6	29.0	34.3	46.5
	Rated current (A) [3-Phase input]	Heavy load	24	31	39	45
		Normal load	31	38	45	61
	Rated current (A)/60 Hz [1-Phase input]	Heavy load	15	18	23	27
		Normal load	18	23	27	35
	Rated current (A)/50 Hz [1-Phase input]	Heavy load	14.6	17.4	22.3	26.2
		Normal load	17.4	22.2	26.1	33.8
	Output frequency		0–400 Hz(IM Sensorless: 0–120 Hz)			
	Output voltage (V)		3-phase 380–480 V			
Rated input	Working voltage (V)		3-phase 380–480 VAC (-15% to +10%) Single phase 480VAC (-5% to +10%)			
	Input frequency		50–60 Hz (±5%)			
	Rated current (A)	Heavy load	27.2	35.3	44.5	51.9
		Normal load	35.3	43.3	51.9	70.8
Weight (lb /kg)	Non-EMC Filter Type		10.8/4.89	10.8/4.91	16.8/7.63	16.9/7.65
	EMC Filter Type		11.1/5.04	11.2/5.06	17.5/7.96	17.6/7.98

- The standard motor capacity is based on a standard 4-pole motor.
- The standard used for 200 V inverters is based on a 220 V supply voltage, and for 400 V inverters is based on a 440 V supply voltage.
- The rated output current is limited based on the carrier frequency set at Cn.04.
- The output voltage becomes 20–40% lower during no-load operations to protect the inverter from the impact of the motor closing and opening (0.4–4.0 kW models only).

11.2 Product Specification Details

Items			Description	
Control	Control method		V/F control, slip compensation, sensorless vector	
	Frequency settings power resolution		Digital command: 0.01 Hz Analog command: 0.06 Hz (60 Hz standard)	
	Frequency accuracy		1% of maximum output frequency	
	V/F pattern		Linear, square reduction, user V/F	
	Overload capacity		Heavy load rated current: 150%, 1 minute, Light load rated current: 120%, 1minute	
	Torque boost		Manual torque boost, automatic torque boost	
Operation	Operation type		Select key pad, terminal strip, or communication operation	
	Frequency setting		Analog type: -10–10 V, 0–10 V, 4–20 mA Digital type: key pad	
	Operation function		• PID Control • 3-Wire Operation • Frequency limit • Second motor function • Anti-forward and reverse direction rotation • Commercial transition • Speed search • Power braking • Up-down operation	• DC braking • Frequency jump • Slip compensation • Automatic restart • Auto tuning • Energy buffering • Flux braking • Fire Mode
	Input	Multi- function terminal (8EA) P1–P8	Select PNP (Source) or NPN (Sink) mode. Functions can be set according to In.65– In.72 codes and parameter settings.	
			• Forward direction operation • Reset • Emergency stop • Multi step speed frequency-high/med/low • DC braking during stop • Frequency increase • 3-wire • Select acc/dec/stop	• Reverse run • External trip • Jog operation • Multi step acc/dec-high/med/low • Second motor selection • Frequency reduction • Fix analog command frequency • Transition from PID to general operation

Items			Description	
	Output	Multi- function relay terminal	Fault output and inverter operation status output	Less than (N.O., N.C.) AC 250 V, 1 A, Less than DC 30 V, 1 A
		Analog output	0–12 VDC: Select frequency, output current, output voltage, DC terminal voltage and others	
		Analog output 2	0–20mA : Select frequency, output current, output voltage, DC terminal voltage and others	
Protection function	Trip		• Over current trip • External signal trip • ARM short current fault trip • Over heat trip • In phase open trip • Ground trip • Motor over heat trip • I/O board link trip • No motor trip • Parameter writing trip • Emergency stop trip • Command loss trip • External memory error • CPU watchdog trip • Motor light load trip	• Over voltage trip • Temperature sensor trip • Inverter over heat • Option trip • Out phase open trip • Inverter overload trip • Fan trip • Pre-PID operation failure • External brake trip • Low voltage trip during operation • Low voltage trip • Analog input error • Motor overload trip • Over torque trip • Under torque trip
	Alarm		Command loss trip warning, overload warning, light load warning, inverter overload warning, fan operation warning, braking resistance braking rate warning, rotor time constant tuning error, inverter pre-overheat warning, over torque warning, under torque warning	
	Instantaneous blackout		Heavy load less than 15 ms (normal load less than 8 ms): (must be within the rated input voltage and rated output range) Heavy load more than 15 ms (normal load more than 8 ms): auto restart operation	
Structure/ working environment	Cooling type		Forced cooling structure(except G100C 0.4kW)	
	Protection structure		IP 20, UL Open Type (UL Enclosed Type 1 is satisfied by conduit installation option.)	
	Ambient temperature		Heavy load: -10–50℃, Normal load: -10–40℃ No ice or frost should be present.	

Items		Description
		Working under normal load at 50℃ (122°F), it is recommended that less than 80% load is applied.
	Ambient humidity	Relative humidity less than 95% RH (to avoid condensation forming)
	Storage temperature	-20℃–65℃
	Environmental factors	Prevent contact with corrosive gases, inflammable gases, oil stains, dust, and other pollutants (Pollution Degree 2 Environment).
	Operation altitude/oscillation	No higher than 3280 ft (1,000 m). Less than 9.8 m/sec^2 (1G). (Apply derating of 1% at a time on voltage/output current for every 100 m increase starting from 1,000 m, going up to a maximum of 4,000m)
	Air pressure	70–106 kPa

* You cannot use the Conduit option when using the Din-rail.

11.3 External Dimensions

0.4kW (G100C)

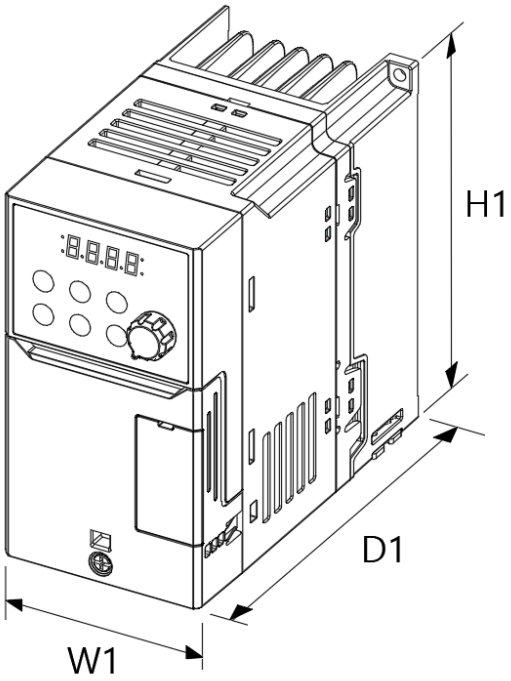

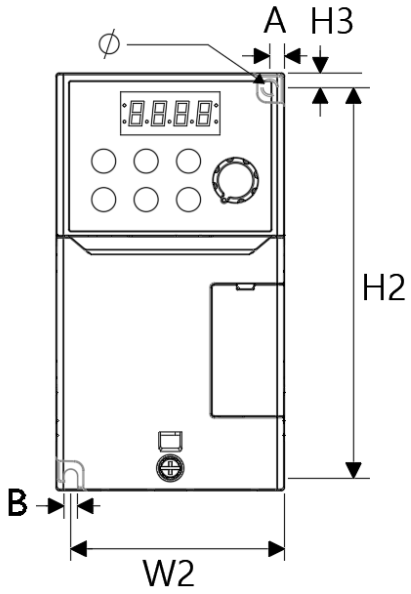

Items	W1	W2	H1	H2	H3	D1	A	B	Φ
0004G100C-2 0004G100C-4	70 (2.76)	65.5 (2.58)	128 (5.04)	119 (4.69)	4.5 (0.18)	130. (5.11)	4.5 (0.18)	4.5 (0.18)	4.5 (0.18)

Units: mm (inches)

0.8 kW (G100C)

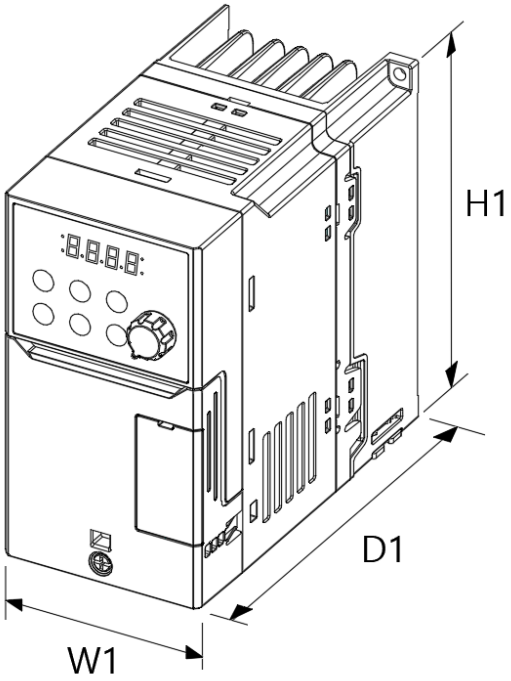

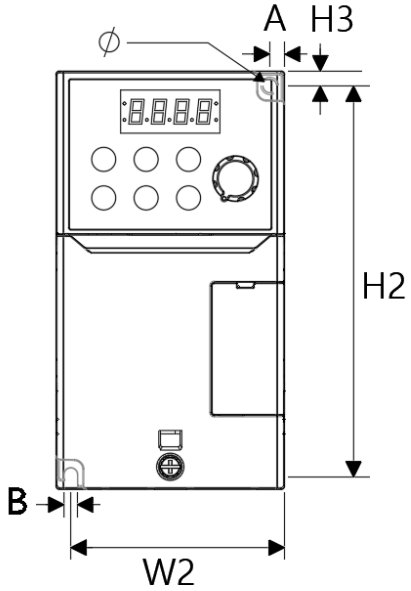

Items	W1	W2	H1	H2	H3	D1	A	B	Φ
0008G100C-2 0008G100C-4	70 (2.76)	65.5 (2.58)	128 (5.04)	119 (4.69)	4.5 (0.18)	135. (5.31)	4.5 (0.18)	4.5 (0.18)	4.5 (0.18)

Units: mm (inches)

1.5~2.2 kW (G100C)

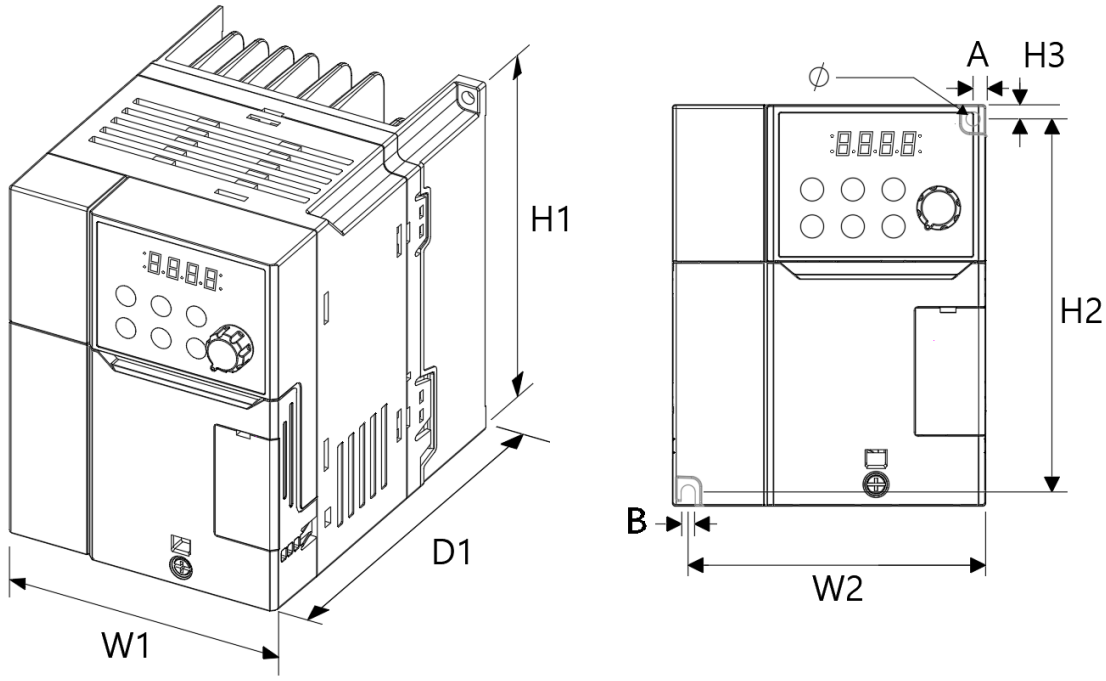

Items	W1	W2	H1	H2	H3	D1	A	B	Φ
0015G100C-2 0015G100C-4 0022G100C-2 0022G100C-4	100 (3.93)	95.5 (3.76)	128 (5.04)	119 (4.69)	4.5 (0.18)	135. (5.31)	4.5 (0.18)	4.5 (0.18)	4.5 (0.18)

Units: mm (inches)

4.0kW (G100C)

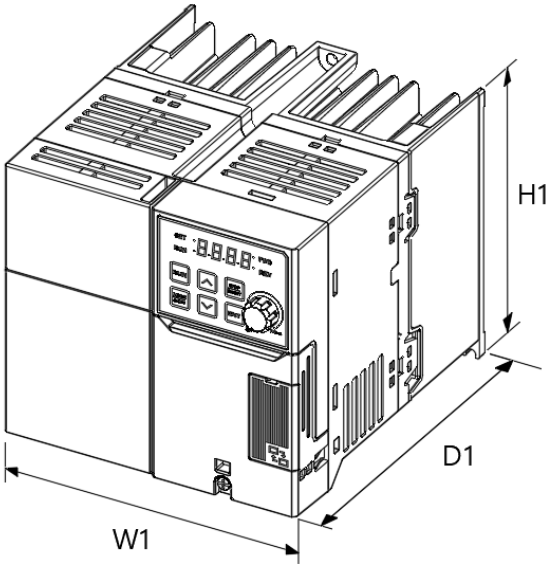

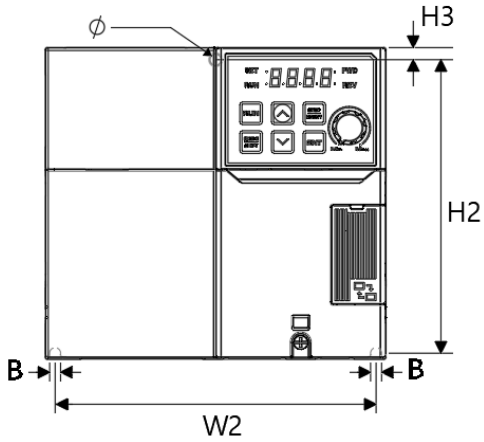

Items	W1	W2	H1	H2	H3	D1	A	B	Φ
0040G100C-2 0040G100C-4	140 (5.51)	132 (5.20)	128 (5.04)	120.5 (4.74)	5 (0.20)	155. (6.10)	-	4.5 (0.18)	4.5 (0.18)

Unit : mm(inches)

0.4~0.8 kW

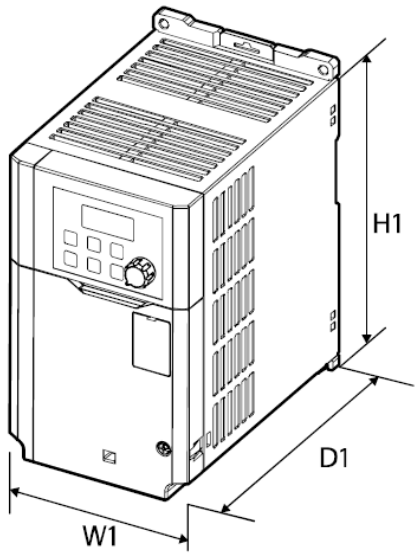

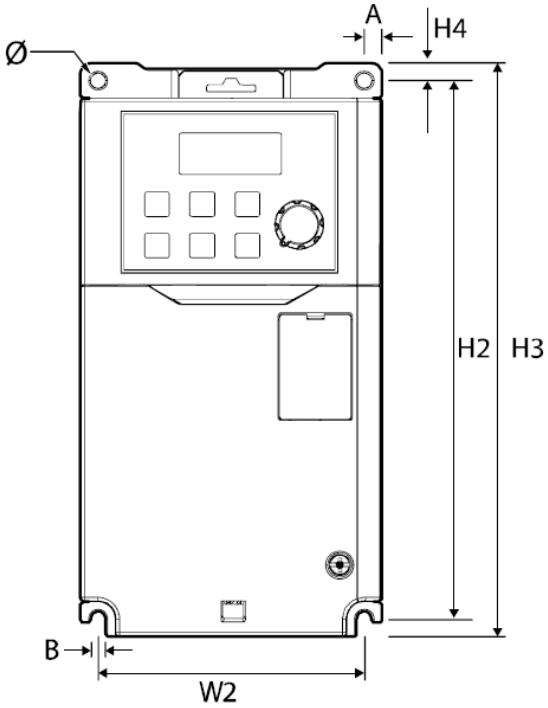

Items	W1	W2	H1	H2	H3	H4	D1	A	B	Ø
0004G100-2 0008G100-2 0004G100-4 0008G100-4	86.2 (3.39)	76.2 (3.00)	154 (6.06)	154 (6.06)	164 (6.46)	5 (0.20)	131.5 (5.18)	5 (0.20)	4.5 (0.18)	4.5 (0.18)

Units: mm (inches)

1.5~2.2 kW

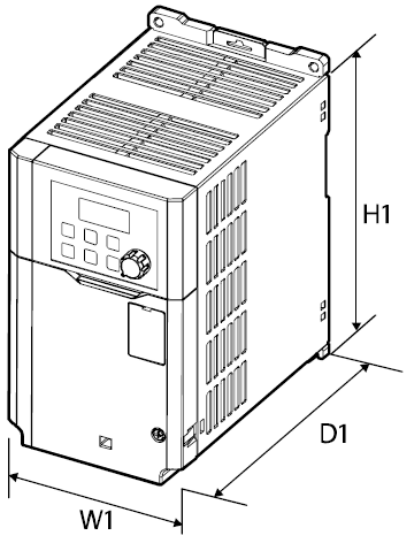

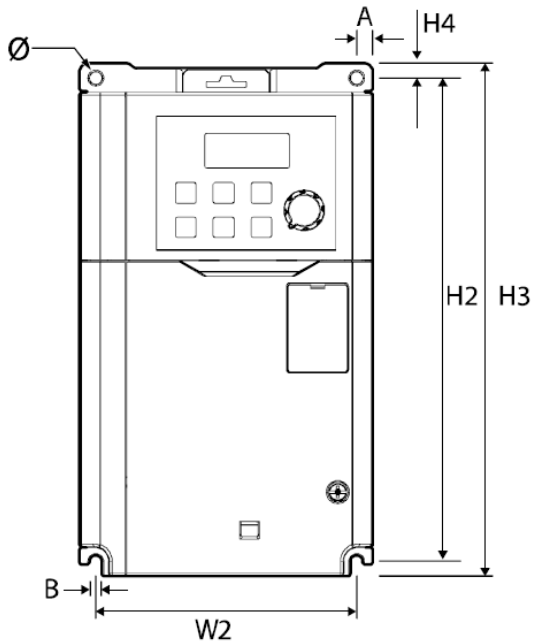

Items	W1	W2	H1	H2	H3	H4	D1	A	B	Ø
0015G100-2 0022G100-2 0015G100-4 0022G100-4	101 (3.98)	90 (3.54)	167 (6.57)	167 (6.57)	177 (6.97)	5 (0.20)	150.5 (5.93)	5.5 (0.22)	4.5 (0.18)	4.5 (0.18)

Units: mm (inches)

4.0 kW

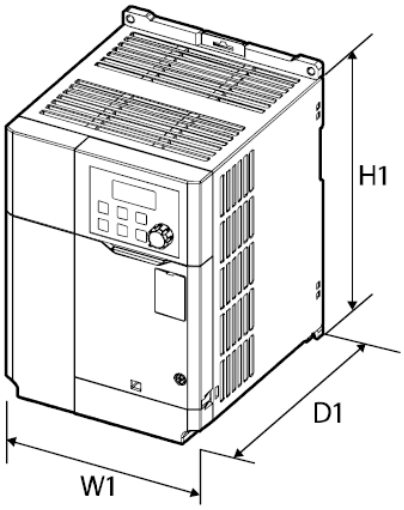

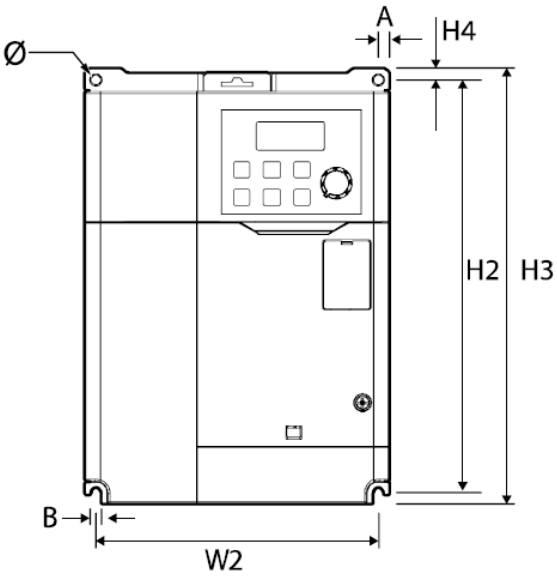

Items	W1	W2	H1	H2	H3	H4	D1	A	B	Ø
0040G100-2 0040G100-4	135 (5.31)	125 (4.92)	183 (7.20)	183 (7.20)	193 (7.60)	5 (0.20)	150.5 (5.93)	5 (0.20)	4.5 (0.18)	4.5 (0.18)

Units: mm (inches)

5.5~7.5 kW

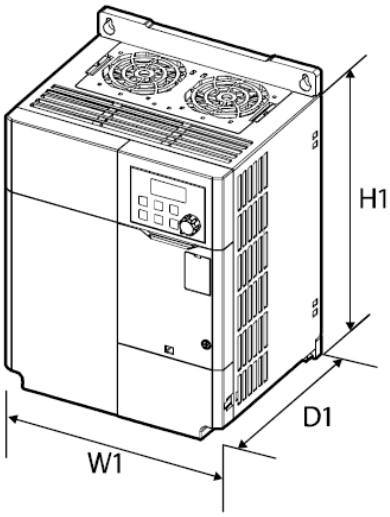

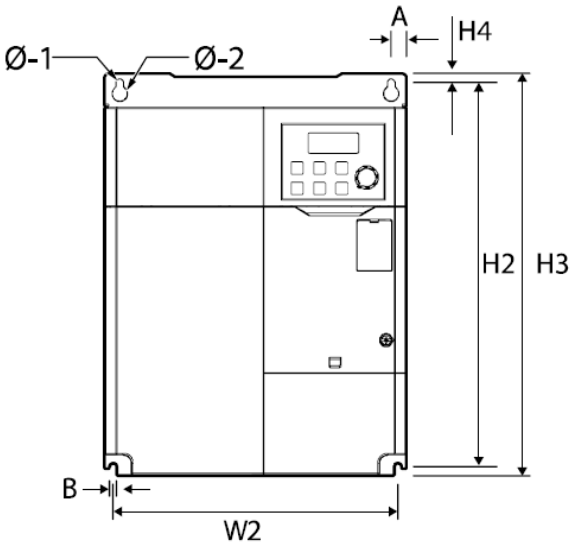

Items	W1	W2	H1	H2	H3	H4	D1	A	B	Ø
0055G100-2 0075G100-2 0055G100-4 0075G100-4	180 (7.09)	Top: 162(6.38) Bottom: 170(6.70)	220 (8.66)	229.5 (9.04)	240 (9.45)	5.5 (0.22)	144 (5.67)	Top: 9(0.35) Bottom: 5(0.20)	4.5 (0.18)	Φ-1 : 4.5(0.18) Φ-2 : 9(0.35)

Units: mm (inches)

11kW-2, 11~15kW-4

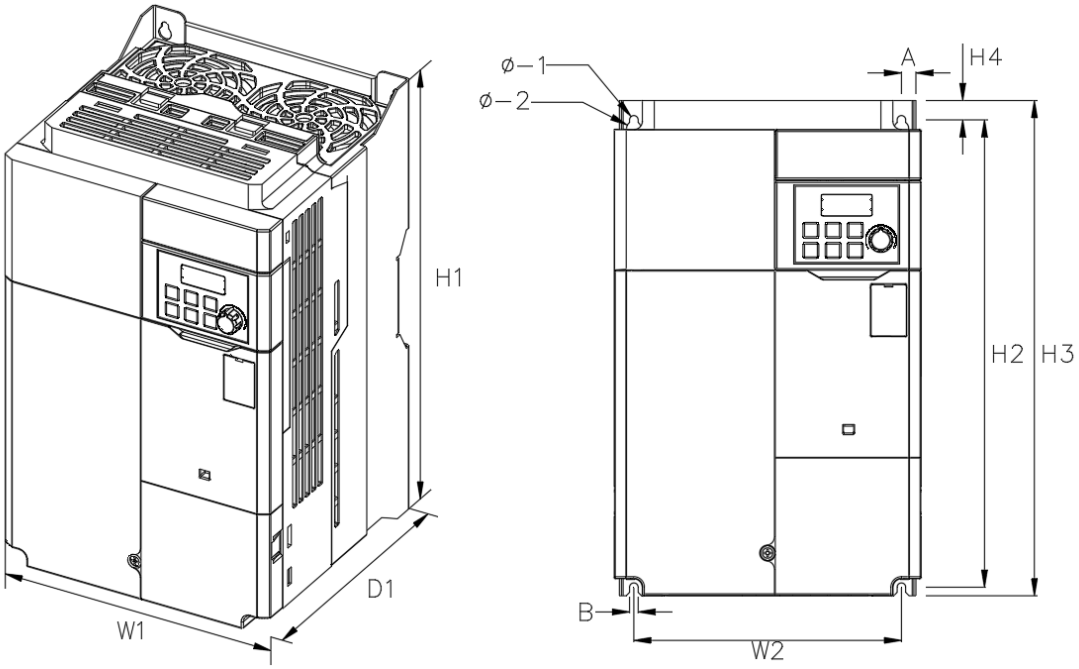

Items	W1	W2	H1	H2	H3	H4	D1	A	B	Φ
0110G100-2 0110G100-4 0150G100-4	180 (7.09)	157 (6.18)	290 (11.4)	273.7 (10.8)	290 (11.4)	11.3 (0.44)	173 (6.81)	8.5 (0.33)	4.5 (0.18)	Φ-1 : 4.5(0.18) Φ-2 : 8.5(0.33)

Units: mm (inches)

15kW-2, 18.5~22kW-4

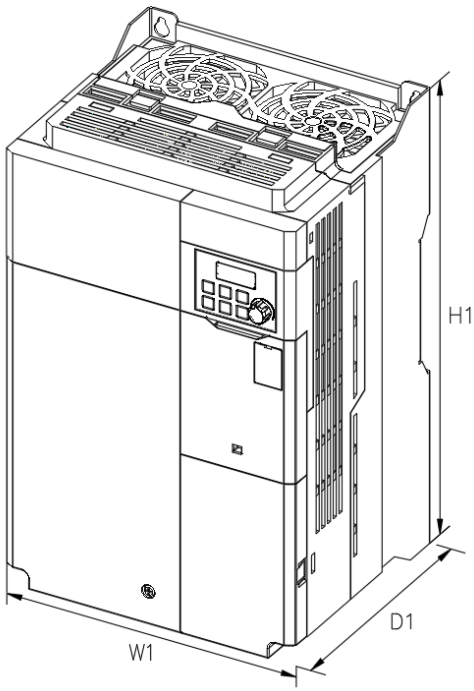

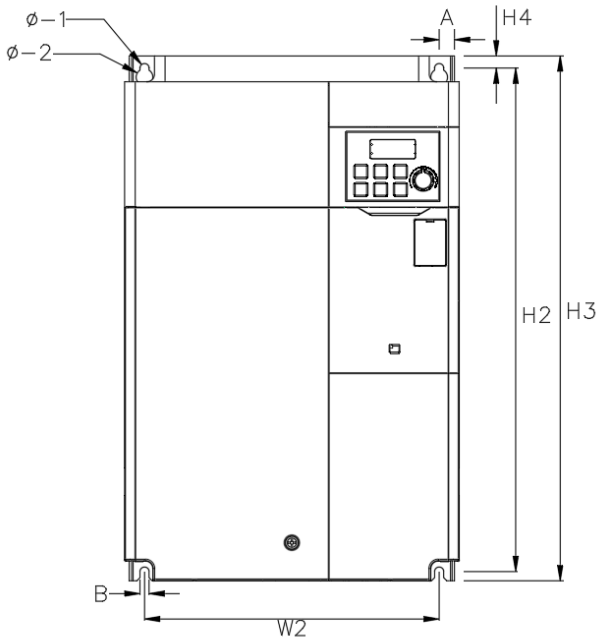

Items	W1	W2	H1	H2	H3	H4	D1	A	B	Φ
0150G100-2 0185G100-4 0220G100-4	220 (8.66)	193.8 (7.63)	345 (13.6)	331 (13.0)	345 (13.6)	8 (0.31)	187 (7.36)	10.1 (0.40)	5.5 (0.22)	Φ-1 : 5.5(0.22) Φ-2 : 11(0.43)

Units: mm (inches)

18.5~22kW-2

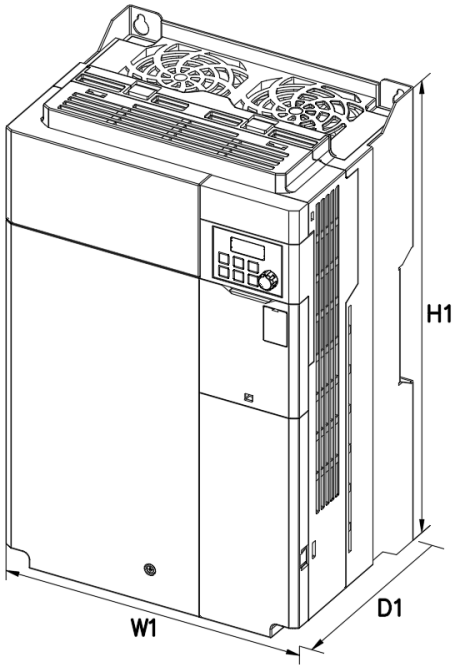

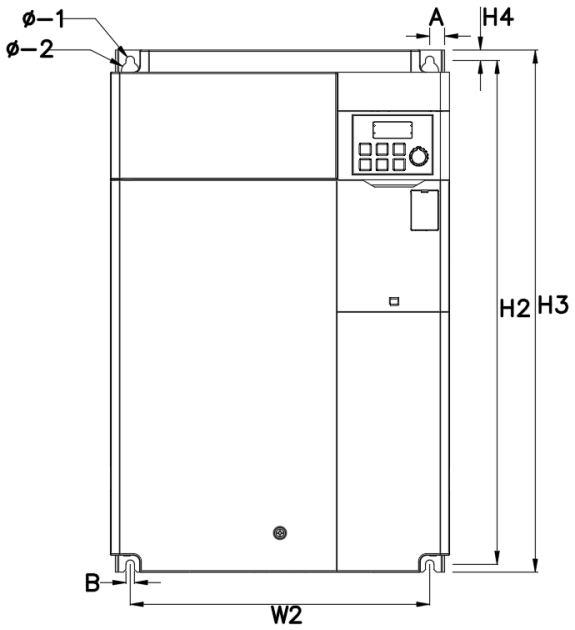

Items	W1	W2	H1	H2	H3	H4	D1	A	B	Φ
0185G100-2 0220G100-2	260 (10.2)	229.8 (9.05)	400 (15.7)	386 (15.2)	400 (15.7)	8 (0.31)	187 (7.36)	11.4 (0.45)	6.6 (0.26)	Φ-1 : 6.6(0.26) Φ-2 : 13.5(0.53)

Units: mm (inches)

11.4 Peripheral Devices

Compatible Circuit Breaker, Leakage Breaker, and Magnetic Contactor Models (manufactured by LS ELECTRIC)

Capacity (kW)		Circuit Breaker			Leakage Breaker		Magnetic Contactor	
		Model	Current (A)	Specific Model Name	Model	Current (A)	Model	Current (A)
3-phase 200 V	0.4	UTE 100H	15	UTE100·H·FTU·15·3P·UL	EBS33c	5	MC-6a	9
	0.75					10	MC-9a, MC-9b	11
	1.5					15	MC-18a, MC-18b	18
	2.2		20	UTE100·H·FTU·20·3P·UL		20	MC-22b	22
	4.0		30	UTE100·H·FTU·30·3P·UL		30	MC-32a	32
	5.5	UTS 150H	50	UTS150·H·FTU·50·3P·UL	EBS53c	50	MC-50a	55
	7.5		60	UTS150·H·FTU·60·3P·UL	EBS63c	60	MC-65a	65
	11		80	UTS150·H·FTU·80·3P·UL	EBS103c	100	MC-85a	85
	15		100	UTS150·H·FTU·100·3P·UL		125	MC-130a	130
	18.5		125	UTS150·H·FTU·125·3P·UL	EBS203c	150	MC-150a	150
	22		150	UTS150·H·FTU·150·3P·UL	EBS203c	175	MC-185a	185
3-phase 400 V	0.4	UTS 150L	3.2	UTS150·L·MCP·3.2·3P·UL	EBS33c	5	MC-6a	7
	0.75		6.3	UTS150·L·MCP·6.3·3P·UL			MC-6a	
	1.5		12	UTS150·L·MCP·12·3P·UL		10	MC-9a, MC-9b	9
	2.2						MC-12a, MC-12b	12
	4.0		20	UTS150·L·MCP·20·3P·UL		20	MC-18a, MC-18b	18
	5.5		32	UTS150·L·MCP·32·3P·UL		30	MC-22b	22
	7.5						MC-32a	32
	11		50	UTS150·L·FTU·50·3P·UL	EBS53c	50	MC-50a	50
	15		60	UTS150·L·FTU·60·3P·UL	EBS63c	60	MC-65a	65
	18.5		70	UTS150·L·FTU·70·3P·UL	EBS103c	75	MC-75a	75
	22		90	UTS150·L FTU·90·3P·UL		100	MC-85a	85

G100C[1)] **Compatible Circuit Breaker, Leakage Breaker, and Magnetic Contactor Models (manufactured by LS ELECTRIC)**

Capacity (kW)		Circuit Breaker			Leakage Breaker		Magnetic Contactor	
		Model	Current (A)	Specific Model Name	Model	Current (A)	Model	Current (A)
3-phase 200V	0.4	UTE 100H	15	UTE100·H·FTU·15·3P·UL	EBS33c	5	MC-6a	9
	0.75					10	MC-9a, MC-9b	11
	1.5					15	MC-18a, MC-18b	18
	2.2	UTE 100E	20	UTE100·E·FTU·20·3P·UL		20	MC-22b	22
	4.0		30	UTE100·E·FTU·30·3P·UL		30	MC-32a	32
3-phase 400V	0.4	UTS 150L	3.2	UTS150·L·MCP·3.2·3P·UL	EBS33c	5	MC-6a	7
	0.75		6.3	UTS150·L·MCP·6.3·3P·UL			MC-6a	
	1.5		12	UTS150·L·MCP·12·3P·UL		10	MC-9a, MC-9b	9
	2.2	UTE 100E	15	UTE100·E·FTU·15·3P·UL			MC-12a, MC-12b	12
	4.0		20	UTE100·E·FTU·20·3P·UL		20	MC-18a, MC-18b	18

Note[1)] The maximum allowed short-circuit current at the power inlet of G100 is 100kA, and G100C is 5kA.

11.5 Fuse and Reactor Specifications

Capacity (kW)		AC Input Fuse			AC Reactor	
		Model	Current (A)	Voltage (V)	Inductance (mH)	Current (A)
3-phase 200 V	0.4	DFJ-10[1)]	10	600	1.20	10
	0.75					
	1.5	DFJ-15	15		0.88	14
	2.2	DFJ-20	20		0.56	20
	4.0	DFJ-30	30		0.39	30
	5.5	DFJ-50	50		0.30	34
	7.5	DFJ-60	60		0.22	45
	11	DFJ-80	80		0.16	64
	15	DFJ-100	100		0.13	79

	18.5	DFJ-110	110		0.12	96
	22	DFJ-125	125		0.1	112
3-phase 400 V	0.4	DFJ-10	10	600	4.81	4.8
	0.75					
	1.5				3.23	7.5
	2.2	DFJ-15	15		2.34	10
	4.0	DFJ-20	20		1.22	15
	5.5	DFJ-30	30		1.12	19
	7.5	DFJ-35	35		0.78	27
	11	DFJ-50	50		0.59	35
	15	DFJ-60	60		0.46	44
	18.5	DFJ-70	70		0.40	52
	22	DFJ-100	100		0.30	68

Note[1]) DFJ is Class J/600 V level model name of the Bussmann company.

Caution

Use Class CC, G, J, L, R or T UL Listed Input Fuse and UL Listed Breaker Only. See the table above For the Voltage and Current rating of the fuse and the breaker. (However, do not use Fast Acting type and Non Time Delay type since these types may shut down power supply when current is drawn.)

Attention

Utiliser UNIQUEMENT des fusibles d’entrée homologués de Classe CC, G, J, L, R ou T UL et des disjoncteurs UL. Se reporter au tableau ci-dessus pour la tension et le courant nominal des fusibless et des disjoncteurs.

11.6 Terminal Screw Specification

Input/output Terminal Screw Specification

Capacity (kW)		Terminal Screw Size	Rated Screw Torque (Kgf·cm/Nm)
3-phase 200 V	0.4	R/S/T, U/V/W: M3(M3.5*)	R/S/T, U/V/W : 5.1 / 0.5 (6.9 / 0.7*)
	0.75		
	1.5	R/S/T, U/V/W: M4(M3.5*)	R/S/T, U/V/W : 12.1 / 1.2 (6.9 / 0.7*)
	2.2		
	4	R/S/T, U/V/W: M4	R/S/T, U/V/W: 18.4 / 1.8 (17.3 / 1.7*)
	5.5	R/S/T, U/V/W : M4	R/S/T : 14.3 / 1.4 U/V/W : 15.0 / 1.5
	7.5		
	11	R/S/T, U/V/W : M5	R/S/T, U/V/W: 25.34 /2.5
	15		
	18.5	R/S/T, U/V/W : M6	R/S/T, U/V/W: 40.8/4
	22		
3-phase 400 V	0.4	R/S/T, U/V/W: M3.5	R/S/T, U/V/W: 10.3 / 1.0 (6.9 / 0.7*)
	0.75		
	1.5		
	2.2		
	4	R/S/T, U/V/W: M4	R/S/T, U/V/W: 18.4 / 1.8 (17.3 / 1.7*)
	5.5	R/S/T, U/V/W : M4	R/S/T : 14.3 / 1.4 U/V/W : 18.4 / 1.8
	7.5		
	11	R/S/T, U/V/W : M5	R/S/T, U/V/W: 25.34 /2.5
	15		
	18.5		
	22		

*G100C

Control Circuit Terminal Screw Specification(G100/G100C)

Terminals	Terminal Screw Size	Screw Torque (Kgf·cm/Nm)
24 / P1~P5 / CM	M2.6	4/0.4
VR / V1 / I2 / AO / CM / S+ / S- / A1/B1/C1 / A2/C2, Q1/EG*	M2.6	5.2/0.5

*G100C series models support Q1/EG terminal as a substitute for A2/C2 terminal.

Control Circuit Terminal Screw Specification (G100 STO)

Terminals	Terminal Screw Size	Screw Torque (Kgf·cm/Nm)
A1/B1/C1/A2/C2	M2.6	5.2/0.5
24/P1~P6/CM/SA/SB/SC	M2	2/0.2
P7~P8/AO/IO/VR/V1/I2 /V2/CM/S+/S-	M2	2/0.2

Caution

Apply rated torques to the terminal screws. Loose screws may cause short circuits and malfunctions. Tightening the screw too much may damage the terminals and cause short circuits and malfunctions. Use copper wires only with 600 V, 75℃ rating for the power terminal wiring, and 300 V, 75℃ rating for the control terminal wiring.

Attention

Appliquer des couples de marche aux vis des bornes. Des vis desserrées peuvent provoquer des courts-circuits et des dysfonctionnements. Ne pas trop serrer la vis, car cela risque d’endommager les bornes et de provoquer des courts-circuits et des dysfonctionnements. Utiliser uniquement des fils de cuivre avec une valeur nominale de 600 V, 75℃ pour le câblage de la borne d’alimentation, et une valeur nominale de 300 V, 75℃ pour le câblage de la borne de commande.

11.7 Braking Resistor Specification

Capacity (kW)		Resistance (Ω)	Rated Capacity (W)
3-phase 200 V	0.4	300	100
	0.75	150	150
	1.5	60	300
	2.2	50	400
	3.7	33	600
	4	33	600
	5.5	20	800
	7.5	15	1,200
	11	10	2,400
	15	8	2,400
	18.5	5	3,600
	22	5	3,600
3-phase 400 V	0.4	1,200	100
	0.75	600	150
	1.5	300	300
	2.2	200	400
	3.7	130	600
	4	130	600
	5.5	85	1,000
	7.5	60	1,200
	11	40	2,000
	15	30	2,400
	18.5	20	3,600
	22	20	3,600

- The standard for braking torque is 150% and the working rate (%ED) is 5%. If the working rate is 10%, the rated capacity for braking resistance must be calculated at twice the standard.

11.8 Continuous Rated Current Derating

Carrier Frequency

The continuous rated current of the inverter is limited based on the carrier frequency. Refer to the following graph.

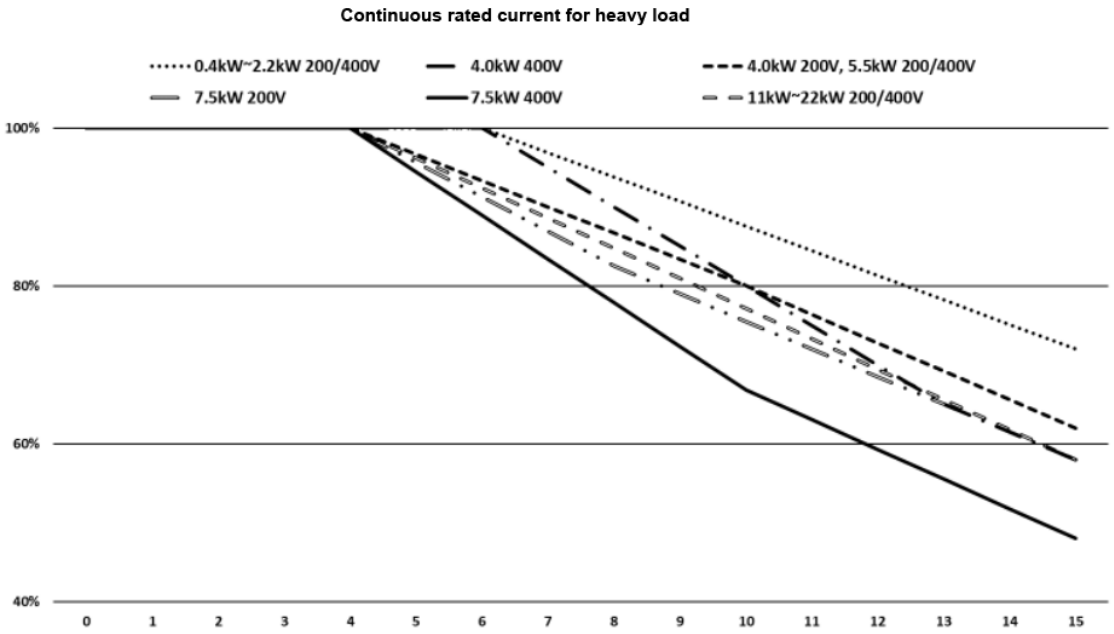

Carrier frequency (kHz)	Continuous rated current									
	0.4–2.2kW		4.0kW		5.5kW		7.5kW		11–22kW	
	200V	400V	200V	400V	200V	400V	200V	400V	200V	400V
1~3	100%	100%	100%	100%	100%	100%	100%	100%	100%	100%
4	100% 96.5%	100%	100%	100%	100%	100%	100%	100%	100%	100%
6	100% 90%*	100%	93%	100%	93%	93%	91%	89%	92%	92%
9	91% 79%*	91%	83%	85%	83%	83%	79%	72%	81%	81%
12	81% 69%*	81%	73%	70%	73%	73%	69%	59%	69%	69%
15	72% 58%*	72%	62%	58%	62%	62%	58%	48%	58%	58%

*G100C 2.2kW

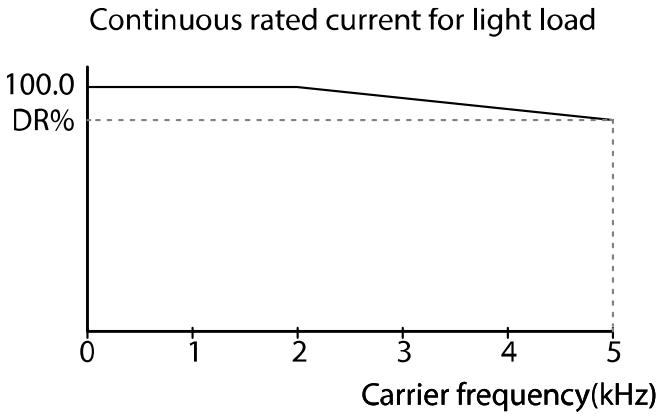

200 V		400 V	
Capacity (kW)	DR (%)	Capacity (kW)	DR (%)
0.4	88	0.4	74
0.75	88	0.75	86
1.5	88	1.5	84
2.2	94 / 85*	2.2	85
4.0	96	4.0	93
5.5	85	5.5	81
7.5	85	7.5	77
11–22	80	11–22	80

*G100C 2.2kW

Input Voltage

The continuous rated current of the inverter is limited based on the input voltage. Refer to the following graph.

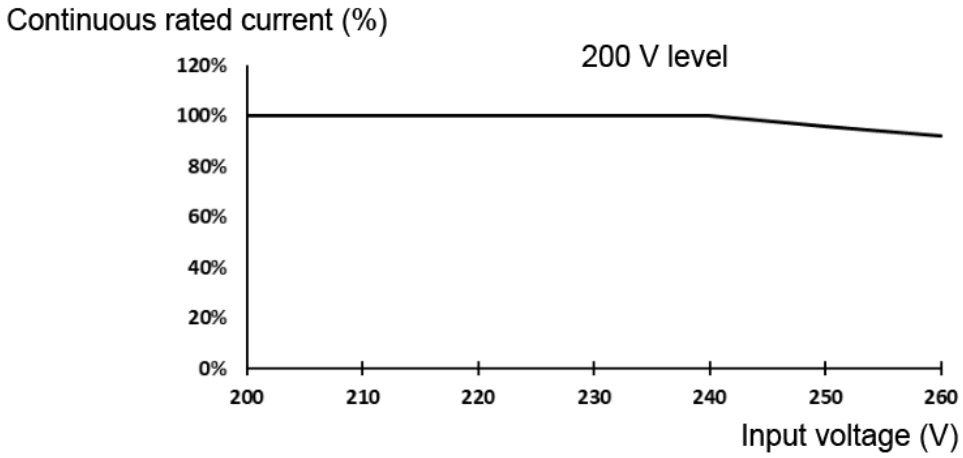

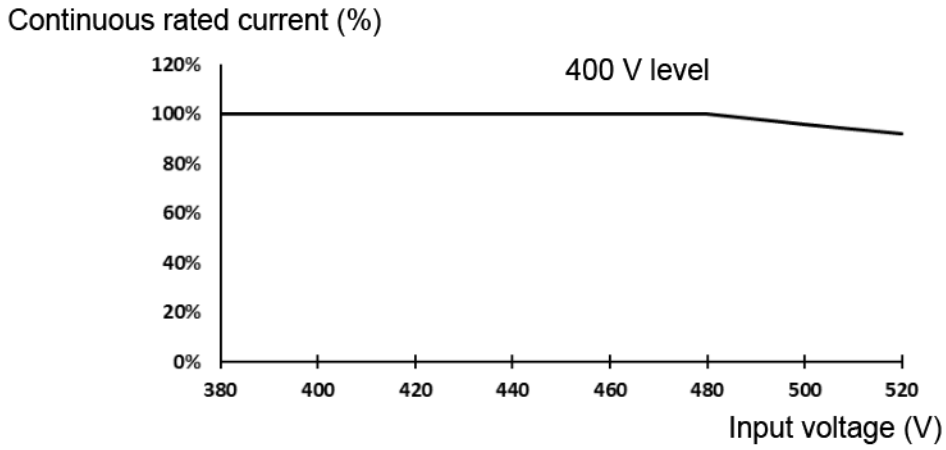

Ambient Temperature/Installation Method

The constant-rated current of the inverter is limited based on the ambient temperature and installation type. Refer to the following graph.

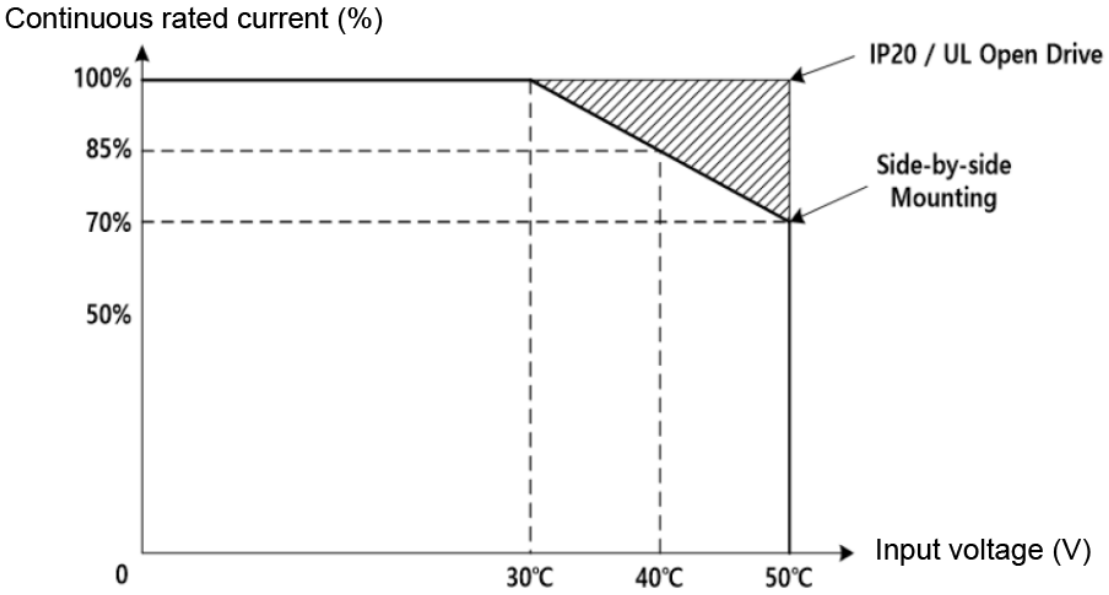

※ This graph is applied to both HD and ND. However, ND lineups include a model for 40 ℃ and below temperature.

11.9 Heat Emission

The following graph shows the G100 inverters' heat emission characteristics (by product capacity).

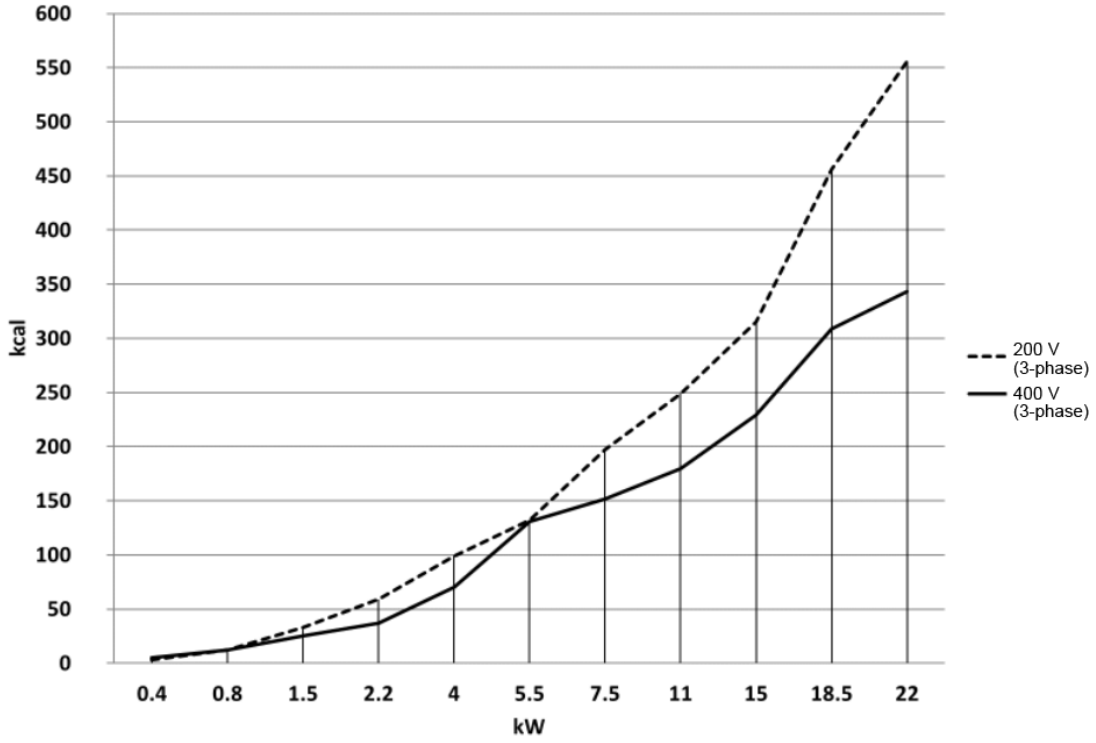

Heat emission has been measured based on the room temperature when the carrier frequency of inverter is set as default. For more information on carrier frequency, refer to **5.15 Operational Noise Settings (Change of Carrier Frequency Settings)** on page **176**.

11.10 Remote Keypad Option

It is comprised of a remote keypad and cables (1 m, 2 m, 3 m, and 5 m).

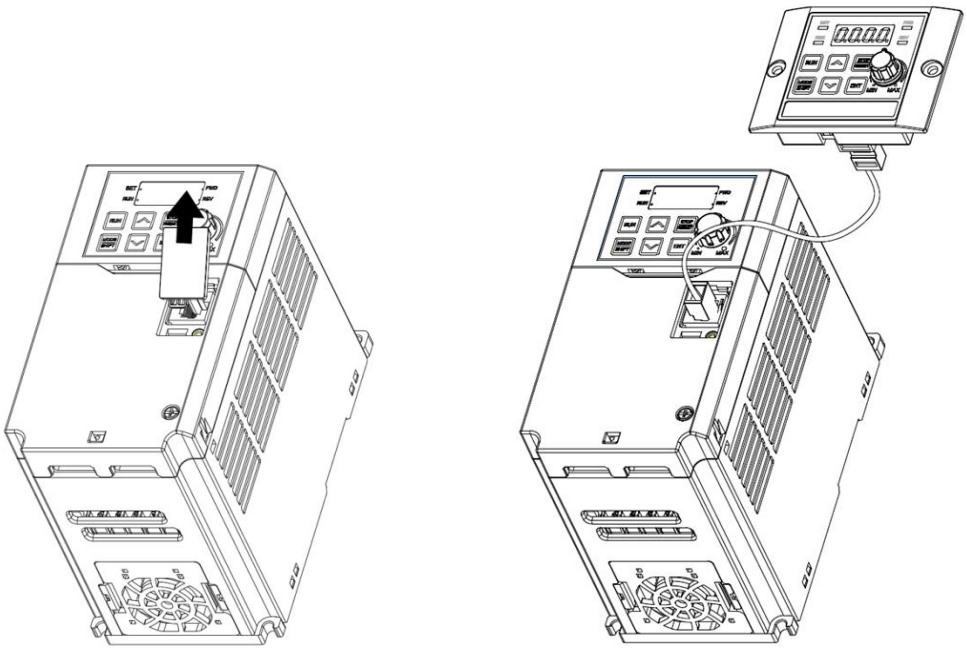

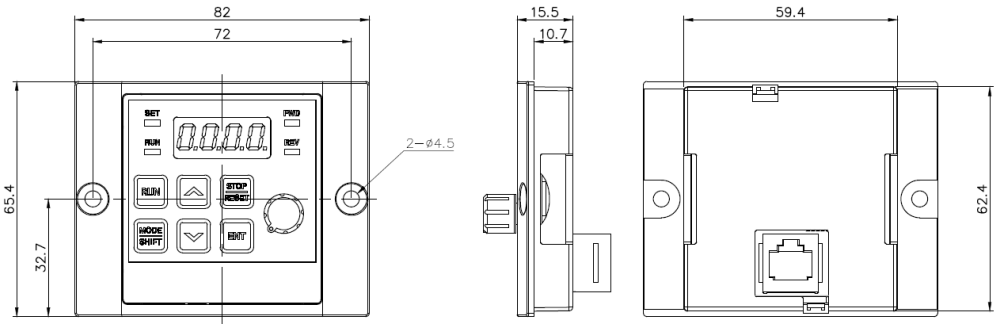

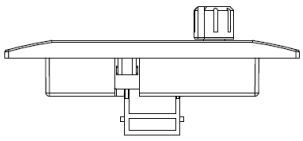

Units: mm

Installation

1 Remove the RJ45 terminal cover on the inverter I/O cover. Connect the remote keypad cable to the I/O RJ45 connector.

2 Connect the other end of the connector of the remote keypad cable to the remote keypad.

Enable

1 Once connected to the remote keypad, the key of the inverter keypad and the button input of the jog controller are ignored. The input is replaced by the key and volume input from the remote keypad.

- Within 2 seconds of detaching the remote keypad, the input for the key and volume is reset to the inverter keypad. (If the frequency setting is set to volume input, the command frequency will instantly switch between the inverter keypad volume and the remote keypad volume when attaching and detaching. Take care so that the motor does not switch to the wrong frequency.)
- If communication is not linked between the inverter and the remote keypad, "E.vEr" is displayed on the 7-Seg of the remote keypad.

2 Set the dr.91 parameter to 4(RemoteUpLoad) in a state of connecting the remote keypad to copy the parameter settings saved in the inverter to the remote keypad.

- “r-UL” is displayed on the inverter I/O 7-Seg keypad while upload is in progress. “d” is displayed on the 7-Seg keypad of the remote keypad. After saving, the message disappears and the default screen is displayed.
- If there is an error, such as poor communication while the upload is in progress, a warning message saying "Fail" is displayed for 3 seconds, and the action of saving the parameters into the remote keypad fails.

3 After connecting the remote keypad where the parameter settings are copied to the inverter product of same model, set the dr.91 parameter to 5(RemoteDownload), and copy the parameter settings saved in the remote keypad to the inverter.

- While saving, a message saying “W-dL” is displayed on the inverter I/O 7-Seg. "U" is displayed on the 7-Seg of the remote keypad. After saving, the message disappears and the default screen is displayed. If parameter data is not saved in the remote keypad, you cannot set the dr.91 parameter to 5(RemoteDownload).
- If there is an error such, as poor communication with the remote keypad, a warning message saying "Fail" is displayed for 3 seconds, and the action of saving the parameters into the inverter fails.
- If the parameter code version or the inverter model is different (copying parameters between 200V ⇄ 400V products), the WErr warning is displayed for 5 seconds, and the action of saving parameters into the inverter fails.

11.11 External Filters

Products (kW)	200V		400V		400V(Footprint)	
	Model	Current(A)	Model	Current(A)	Model	Current(A)
0.4	FLD3007	7	FLD3007	7	FFG100T006-3	6
0.75						
1.5	FLD3016	16	FLD3016	16	FFG100T012-3	12
2.2						
4	FLD3030	30			FFG100T016-3	16
5.5	FLD3042	42	FLD3030	30	FFG100T030-3	30
7.5						
11	FLD3100	100	FLD3055	55	FFG100T050-3	50
15						
18.5	FEP-T180	180	FLD3075	75	FFG100T070-3	70
22						

- EMC filter complies with Category C2(EN61800-3) requirements.
- For Non-Filter type products, external filters listed in the table above must be used for CE EMC compliance.

12 Safety Function STO (Safe Torque Off)

Among the G100 series, the G100 STO product provides a Safety Torque Off(STO) function. In case of emergency, the inverter output can be immediately cut off to product the user and prevent danger. This manual includes only a basic description of the safety functions. For detailed information, please refer to the G100 Safety Manual.

12.1 Safety Standards

The Safety Torque off feature of the G100 STO product complies with the following European directives and standards.

- European Machinery Directive 2006/42/EC
- EN 61800-5-2:2017 SIL2
- EN ISO 13849-1:2023 Category 3, PL d
- EN 61508:2010 SIL2

Caution

Use caution when using safety features, verify that the system's risk factors are identified and safety requirements are met.

Note

When wiring or performing maintenance on the inverter, ensure that the power to the inverter is turned off. Safety functions are not intended to electrically isolate the inverter.Following parameter initialization, all parameters are reset to factory default values. Ensure that parameters are reconfigured before running the inverter again after an initialization.

12.2 Safety Features Description

The Safety Torque Off(STO) function provided by the G100 series consists of two independent channels(SA,SB). If either channel becomes activated during operation, it interrupts the motor drive gate signals, cutting off power supplied to the motor. When the motor power is interrupted, torque output is halted, allowing the motor to Free-run. And the keypad will display the ‘SFA’ or ‘SFB’ Trip message depending on the operation channel.

The Safe Torque Off function can be activated by removing the Safety connector applied to the SA, SB, and SC terminals on the IO terminal block. When SA, SB is connected to SC, it operates normally, and when it is disconnected from SC, Safe Torque Off function is activated. To disable the Safety function after activation, reconnect the SA and SB to the SC with the Safety connector and press the [STOP/RESET] key.

12.3 Safety Operation Description

[When using internal 24V DC power]

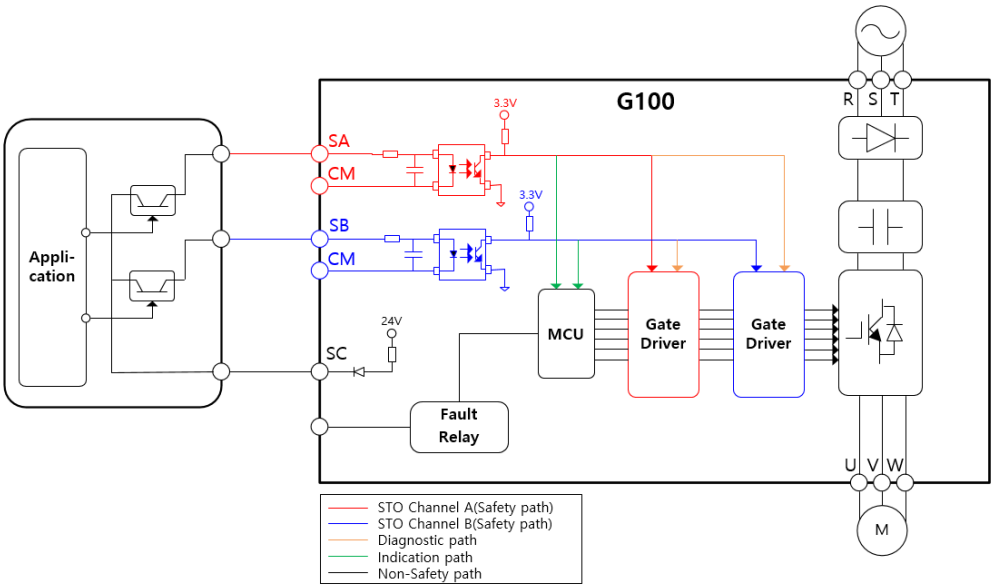

[When using external 24V DC power]

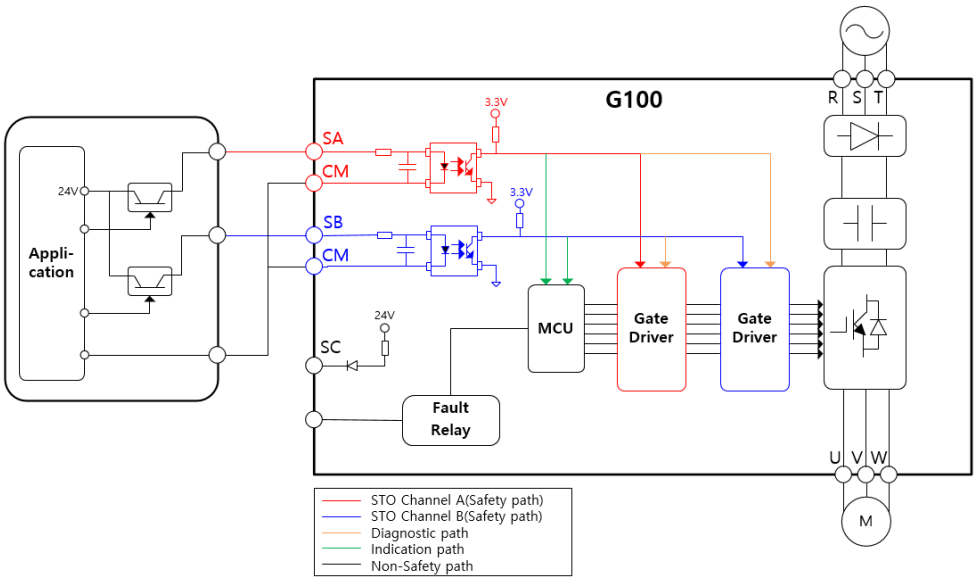

Product Warranty

Warranty Period

The warranty period is 24 months from the date of manufacture.

Scope of Warranty

1. The initial diagnosis of faults should be conducted by the user. However, upon request, LS ELECTRIC or its representative(s) can undertake this task for a fee. If the cause of the fault is found to be the responsibility of LS ELECTRIC, this service will be free of charge.
2. This warranty only applies if the product is used under normal conditions according to the specifications and precautions described in the handling instructions, user manuals, catalogs, and caution labels.
3. During the warranty period, repairs shall be charged for the following cases:
   (1) Replacement of consumable and life-limited parts (e.g. relays, fuses, electrolytic capacitors, batteries, fan, etc.)
   (2) Failures or damage caused by improper storage, handling, negligence, or accidents by the user
   (3) Failures resulting from the user's hardware or software design
   (4) Failures caused by modifications made without LS ELECTRIC’s consent (If modifications or repairs are not conducted by LS ELECTRIC or its representative(s), further repairs including paid services will be refused)
   (5) Failures that could have been avoided if the user's equipment, in which the product is incorporated, had safety devices required by legal regulations or common industry standards
   (6) Failures that could have been prevented if maintenance and replacement of consumable parts were performed normally according to the handling instructions or user manuals
   (7) Failures and damage to the product caused due to the connected equipment or use of inappropriate consumables
   (8) Failures caused by external factors such as fire, abnormal voltage, force majeure, and natural disasters such as earthquakes, lightning, salt damage, wind, flood damage, etc.
   (9) Failures that cannot be predicted/solved by current scientific technology at the time of manufacture
   (10) Other failures, damage, or defects recognized as the responsibility of the user.

EC DECLARATION OF CONFORMITY

We, the undersigned,

Representative:	**LS ELECTRIC Co., Ltd.**
Address:	**LS Tower, 127, LS-ro, Dongan-gu, Anyang-si, Gyeonggi-do, Korea**
Manufacturer:	**LS ELECTRIC Co., Ltd.**
Address:	**56, Samseong 4-gil, Mokcheon-eup, Dongnam-gu, Cheonan-si, Chungcheongnam-do, Korea**

Certify and declare under our sole responsibility that the following apparatus:

Type of Equipment:	**Inverter (Power Conversion Equipment)**
Model Name:	**LSLV-G100 series**
Trade Mark:	**LS ELECTRIC Co.,Ltd.**

This declaration of conformity is under the sole responsibility of the manufacturer.

Conforms to the essential requirements of the directives:

2014/30/EU Directive of the European Parliament and of the Council on the harmonization of the laws of the Member States relating to electromagnetic compatibility.

2014/35/EU Directive of the European Parliament and of the Council on the harmonization of the laws of the Member States relating to the making available on the market of electrical equipment designed for use within certain voltage limits.

2011/65/EU Directive on the restriction of the use certain of certain Hazardous Substances in electrical and electronic equipment –RoHs.-

Based on the following specifications applied:

EN IEC 61800-3:2018
EN 61800-5-1:2007+A1:2017+ A11:2021
EN IEC 63000:2018

and therefore, complies with the essential requirements and provisions of the 2014/30/EU, 2014/35/EU and 2011/65/EU Directives.

Place: **Cheonan, Chungnam, Korea**

박 창 근 2022. 8. 16 (Signature/Date)

Mr. PARK CHANGKEUN / Manager

UL mark

The UL mark applies to products in the United States and Canada. This mark indicates that UL has tested and evaluated the products and determined that the products satisfy the UL standards for product safety. If a product received UL certification, this means that all components inside the product had been certified for UL standards as well.

Suitable for Installation in a compartment Handing Conditioned Air

CE mark

The CE mark indicates that the products carrying this mark comply with European safety and environmental regulations. European standards include the Machinery Directive for machine manufacturers, the Low Voltage Directive for electronics manufacturers and the EMC guidelines for safe noise control.

Low Voltage Directive
We have confirmed that our products comply with the Low Voltage Directive (EN 61800-5-1).

EMC Directive
The Directive defines the requirements for immunity and emissions of electrical equipment used within the European Union. The EMC product standard (EN 61800-3) covers requirements stated for drives.

EAC mark

The EAC (EurAsian Conformity) mark is applied to the products before they are placed on the market of the Eurasian Customs Union member states.
It indicates the compliance of the products with the following technical regulations and requirements of the Eurasian Customs Union:
Technical Regulations of the Customs Union 004/2011 “On safety of low voltage equipment”
Technical Regulations of the Customs Union 020/2011 “On electromagnetic compatibility of technical products”

Manual Revision History

Revision History

No	Date	Edition	Changes
1	2019.01	First release	-
2	2020.06	2nd Edition	S/W Version up(V1.1)
3	2022.09	3rd Edition	S/W Version up(V1.4)
4	2024.08	4th Edition	Add Safety product

Index

0

0 – +10 V voltage input 75, 81

1

-10 – +10 V voltage input.....79, 85

2

24 terminal 39, 42
2nd Motor Function group. Refer to M2 (2nd Motor function group)
2nd Motor Operation 177
2nd Operation mode..... 118
  2nd command source.....118
  Shared command (Main Source) ...118

3

3 Phase 200V (0.4-4 kW) 359
3 Phase 400V (0.4-4 kW) 361
3 Phase 400V(0.4~4kW) 362
3-Wire Operation..... 142

7

7-segment display..... 52

A

A terminal (Normal Open)..... 119
A1/C1/B1 terminal..... 39
AC power input terminal.....Refer to R/S/T terminal
Acc/Dec pattern.....72, 102
  linear pattern.....102
  S-curve pattern 102
Acc/Dec reference frequency.....97, 98
  Delta Freq 97
  Max Freq.....97
Acc/Dec stop 104
Acc/Dec time 97
  Acc/Dec time switch frequency 101
  configuration via multi-function terminal 99
  Maximum frequency 97
  operation frequency.....98
Ad (Advanced function group) 54, 280
Advanced feature group .....Refer to AP (Advanced function group)
Advanced function group..... Refer to Ad (Advanced function group)
analog frequency hold 89
  Analog Hold 89
Analog Hold.Refer to analog frequency hold
Analog input 38, 54
  I2 current input.....87
  V1 voltage input.....75, 81
Analog output..... 39, 54, 189
  AO terminal.....39
  Voltage analog output 189, 192
AO terminal 39, 95
AP (Advanced function group).....54, 305
ARM short current fault trip..... Refer to Over Current2
ASCII Code 250
assembly diagram 3
Asymmetric ground power 44
  EMC filter.....44
asynchronous communications system 237
auto restart settings..... 174
Auto torque boost
  Auto tuning 155
Auto tuning 155, 277
  All (Rotation type).....157
  All (static).....157
  Tr (Static type).....157
Automatic restart after reset of a fault trip condition 96
Auto-Tuning
  Default Settings 156
auxiliary frequency..... 133
  auxiliary frequency reference configuration 133
  auxiliary reference 133
  auxiliary reference gain 134
  Configuration 133
  final command frequency calculation 135

main reference.....133

B

B terminal (Normal Close) 119
bA (Basic function group).....54, 276
Basic configuration diagram 16
Basic group..... Refer to bA (Basic function group)
Basic operations 51
Bipolar 38, 79, 85
Bit..... 119
Bit Off Status 120
bit setting 120
multi-function input setting.....119
multi-function output setting 199
speed search Setting.....172
stall prevention 213
brake control.....184
BR Control 184
brake engage sequence.....185
brake release sequence 185
Brake unit.....16, 187
braking resistance..... 30
braking resistor circuit 221
Braking Resistor Specification.....382
braking torque.....382
DB Warn %ED.....221
broadcasting.....247
built-in communication..... Refer to RS-485
BX.....341

C

Cable 12
Copper cable 12
Ground Cable Specifications.....12
Power I/O Cable Specifications.....12
Shielded twisted pair 47
Signal (Control) Cable Specifications 13
cable tie 41
Carrier frequency 31, 175
derating.....383
Factory default output.....176
Charge indicator.....20, 339, 347
Cleaning.....353
CM (Communication function group)54, 300
CM terminal.....38, 42, 62
Cn (Control function group).....54, 286
commercial power source transition 178
Communication..... 237
Baud rate 240
Comm. Address.....252
command loss protective operation242
communication line connection 239
communication parameters.....240
communication standards 237
communication system diagram.....239
Memory Map.....245
PLC.....237
protocol 246
saving parameters defined by communication.....244
setting virtual multi-function input...244
Communication function group.Refer to CM (Communication function group)
compatible common area parameter..... 258
Control group . Refer to Cn (Control function group)
Control terminal board wiring 32
Cooling Fan..... 179
cooling fan malfunction.....226
Fan control.....179
Crimp terminal connector 40
customer service center..... 339

D

DC braking after start.....111
DC braking after stop 113
DC braking frequency 113
DC link voltage.....131, 165
Delta wiring.....44
derating.....176, 383
Digital Output 194
Disposal.....353, 357
Dr (Drive group).....54, 272
draw operation 131
Drive Group.....Refer to dr (Drive group)
Dwell Operation 145
Acc/Dec dwell frequency 145
acceleration Dwell 145
deceleration Dwell 145

E

electronic thermal motor overheating prevention (ETH) 205
ETH trip 205
EMC filter 44
Asymmetric power 44
Disable 44
Enable 45
Emergency stop trip ..... Refer to BX
Enclosed Type 1 364
Energy buffering 165
Energy saving operation 169
automatic energy saving operation 169
manual energy saving operation 169
ENT key 53
error code 250
FE(frame error) 250
IA(illegal data address) 250
ID(illegal data value) 250
IF(illegal function) 250
WM(write mode error) 250
ETH ..... Refer to electronic thermal motor overheating prevention (ETH)
Excitation Current 160
External 24V power source ..... Refer to 24 terminal
External dimensions
0.8–1.5kW(Single Phase), 1.5–2.2kW(3 Phase) 371
2.2kW(Single Phase), 3.7-4.0kW(3 Phase) 372
5.5-22kW(3–Phase)..... 373, 374, 375, 376
External trip ..... Refer to External Trip
External Trip 218, 341
external trip signal 218

F

Factory default output 62, 63, 391
Fan trip ..... Refer to Fan Trip
Fan Trip 226, 342
Fan Warning ..... 226, 344, Refer to Fan Warning
fatal 339
fault 234
fatal 339
fault/warning list 234
latch 339
Level type 339
major fault 234
minor fault 235
trip 339
warning 235, 343
Fault signal output terminal ..... Refer to A1/C1/B1 terminal
FE(frame error) 250
Ferrite 41
Fieldbus ..... 74, 92, Refer to Fieldbus Communication option 118
Filter time constant 76, 82, 119
Flux braking 212
Free-run stop 114
Frequency jump 117
Frequency limit 115
Frequency jump 117
Frequency upper and lower limit value 116
Maximum/start frequency 115
Frequency setting 74
I2 current input 87
Keypad 74, 75
RS-485 89
V1 voltage input 75, 81
Frequency setting (voltage) terminalRefer to V1 terminal

G

G100 expansion common area parameter 261
control area parameter (Read/ Write) 266
memory control area parameter (Read and Write) 268
Monitoring Area Parameter (Read Only) 261
Ground 24
Class 3 ground 26
Ground Cable Specifications 12
Ground Terminal 24
Special class 3 ground 26
Ground trip ..... Refer to Ground Trip
Ground Trip 340
ground fault trip 340

H

half duplex system 237
Heavy load 7, 176

I

I2 terminal 38, 87
  Voltage/current input for frequency reference input 38
IA(illegal data address) 250
ID(illegal data value) 250
IF(illegal function) 250
IN (Input terminal function group) 54, 289
In Phase Open 340
  Input open-phase protection 217
In phase open trip .. Refer to In Phase Open
Initial excitation time 161
input and output specification 359
input power frequency 180
Input power voltage 180
Input terminal 38
  CM terminal 38
  I2 terminal 38
  P1–P8 terminal 38
  V1 terminal 38
  VR terminal 38
Input terminal function group ..... Refer to IN (Input terminal function group)
Input/output open-phase protection 217
Inrush current 16
Inspections
  annual Inspections 355
  bi-annual Inspections 356
  Daily inspections 353
Installation 15
  Basic configuration diagram 16
  Installation Flowchart 15
  Mounting the Inverter 17
  Selecting location 8
  Wiring 20
Installation Environment 7
  Air Pressure 7
  Ambient humidity 7
  Ambient temperature 7
  Environmental factors 7
  Operation altitude/oscillation 7
Instantaneous blackout 165, 172, 173
inverse time-limit thermal characteristics 340
Inverter Overload Protection 219
IP 20 364

J

Jog operation 137
  Jog Frequency 137
Jump Code 56
jump frequency 117

K

Keypad 51
  Display 51
  Operation key 51
Keypad display 52
Keypad key 53
  [ENT] key 53
  [MODE/SHIFT] key 53
  [RUN] key 53
  [STOP/RESET] key 53

L

latch 339
Leakage Breaker 350
Level 17
Level type 339
Lifetime diagnosis of components 227
  lifetime diagnosis for fans 227
lift-type load 102, 108, 145
linear pattern 102
Linear V/F pattern operation 104
  Base frequency 105
  Start frequency 105
Lost Command 343, 344
  command loss fault trip warning 235
  Command loss trip 235
Low Voltage 228, 340
  Low voltage trip 228, 234
low voltage trip 2 231
LS INV 485 protocol 246

M

M2 (2nd Motor function group) 54, 313

Magnetic contactor 31, 377
Maintenance.....353
manual torque boost.....108
Master 239
megger test..... 355, 356
Micro surge filter.....31
Modbus-RTU Protocol .....252, Refer to Modbus-RTU Protocol
monitor 67
Monitor Registration Detailed Protocol 249
Motor output voltage adjustment..... 110
motor protection 205
Motor rotational direction.....49
mounting bolts.....17
Mounting bracket 18
multi-drop Link System.....237
Multi-function (open collector) output terminal
multi-function output terminal and relay settings.....194
multi-function output terminal delay time settings.....200
Multi-function relay 1 item(Relay 1)296
Multi-function relay 2 item(Relay 2)297
multi-function relay on/off control ...186
trip output by multi-function output terminal and relay 199
Multi-function input terminal.....38
Control 119
Factory default output 38
In.65–72 292
Multi-function input terminal Off filter 119
Multi-function input terminal On filter 119
Px terminal setting options 292
Multi-function key 52
multi-function output
multi-function output terminal delay time settings.....200
trip output by multi-function output terminal and relay 199
Multi-step speed frequency 90
Configuration 90
Speed-L/Speed-M/Speed-H 91

N

No motor trip ..... Refer to no motor trip
No Motor Trip 230, 340
No. of time constant filter 76, 82
Noise 77, 83
Low-pass filter 76, 82
Normal load.....7, 176
NPN mode (Sink) 43
NPN/PNP mode selection switch (SW1)..34

O

Operation command 92
Configuration 92
fwd/rev command terminal 92
Keypad 92
RS-485 94
run command/rotational direction configuration 93
Operation frequency.....Refer to frequency setting
Operation Group.....54, 271
Operation noise 175, 387
Carrier frequency.....175
Frequency jump.....117
Option trip .....Refer to Option Trip-x
Option Trip-x
Option trip 229, 234
OU (output terminal function group).54, 294
Out Phase Open..... 340
Out phase open trip..... Refer to Out Phase Open
output block by multi-function terminal... 228
Output terminal ..... Refer to R/S/T terminal
Output terminal function group.. Refer to OU (output terminal function group)
Output/communication terminal.....39
24 terminal.....39
A1/C1/B1 terminal 39
AO terminal.....39
S+/S- terminal.....39
Over current trip..... Refer to Over Current1
Over Current1 340
Over Current2 341
Over Heat 341
Over heat trip ..... Refer to Over Heat
Over Load..... 339

overload trip 207, 210, 235
overload warning ... 207, 210, 235, 343
Over Voltage 340
Over voltage trip ..... Refer to Over Voltage
overload rate 176
overload trip ..... Refer to Over Load
overload warning ..... Refer to Over Load

P

P/I gain 173
P1–P8 ..... Multi-function Input
parameter
Changed parameter display 183
initialization 181
parameter lock 182
password 182
Table of Functions 271
part names 3
password 182, 269
peripheral devices 377
phase-to-phase voltage 348
PID Control 148
Basic PID operation 149
Configuration 148
differential time 151
integral time (PID I-Time) 151
oscillation 151
P-gain 151
PID feedback 342
PID Operation Sleep mode 154
PID output 150
PID reference 150
PID Switching 155
Pre-PID Fail 153
Pre-PID Operation 153
PLC 237
PNP mode (Source) 42
PNP/NPN mode selection switch (SW1)
NPN mode (Sink) 43
PNP mode (Source) 42
Post-installation checklist 46
Potentiometer 38, 63, 75
Power resolution 77, 83
Power terminal board wiring 27
Power Terminal Wiring See power terminals
Power terminals 30
R/S/T terminals 30
U/V/W terminal 30
Power-on Run ..... Refer to start at power-on
Pr (Protection function group) 54, 307
press regeneration prevention 187
P gain/I gain 187
Protection feature group ..... Refer to Pr
(Protection function group)
protocol 246
LS INV 485 protocol 246
Modbus-RTU Protocol 252
PWM
PWM
frequency modulation 175

Q

Quantizing ..... 77, 83, Refer to Quantizing,
Refer to Quantizing
Noise 77, 83

R

R/S/T terminals 30, 31, 347
Rated 359, 360, 362
braking resistance rated capacity ... 382
derating 383
Motor rated current 147
Motor rated voltage 155
Rated input 359, 360, 362
Rated output 359, 360, 362
Rated slip speed 147
rated torque current 190, 193
rating plate 1
Reactor 16, 378
Regenerated energy 115, 165, 212
Reset Restart .. Refer to restarting after a trip
resonance frequencies 117
Carrier frequency 175
Ripple 78, 84
RS-232 239
Communication 239
converter 239
RS-485 237
built-in communication 89
Communication 239
converter 239
Signal terminal 39, 89
RS-485 signal input terminal . Refer to S+/S-

terminal
run prevention
Fwd 95
Rev 95

S

S+/S- terminal..... 39
Safe Operation mode 144
Safety Information.....ii
screw specification..... 380
control circuit terminal screw 381
input/output terminal screw specification 380
screw size 380
screw torque 380
S-curve pattern..... 102
Calculation method for actual acc/dec time 103
Selecting the installation site 8
Side by side 10
sensorless vector control 158
Configuration 160
Hold Time 161
IM Sensorless.....160
Initial excitation time 161
sensorless vector control operation guide 163
Sequence common terminal .... Refer to CM terminal
SET indicator 52
setting virtual multi-function input.....244
Side by side .....10, 386, See side by side
Slave.....239
Slip..... 147
slip compensation operation..... 147
speed command loss 219
speed search operation 170
Flying Start-1 171
Flying Start-2 171
options 172
P/I gain.....173
Square reduction..... 72
Square reduction load 105
V/F pattern operation.....105
stall.....212
stall bit on/off 213
stall prevention 212
standard 4-pole motor.....360, 362
start at power-on.....95
Start Mode.....110
Accelerating start.....110
DC braking after start 111
Station ID 252
Stop Mode.....112
DC braking after stop 113
Deceleration stop 112
Free-run stop 114
Power braking.....115
storage 357
Storage temperature 7
Surge killer..... 31, 46
Switch 34
NPN/PNP mode selection switch (SW1).....34
Terminating resistor selection switch (SW2).....34

T

Target frequency..... 74, 110
Technical Specification..... 359
specification details 363
terminal 119
A terminal 119, 200, 218
B terminal 119, 200, 218
Terminal for frequency reference setting .....Refer to VR terminal
Terminating resistor selection switch (SW2) 34
Test run 48
Time scale setting.....97
0.01sec 98
0.1sec 98
1sec 98
Timer 183, 198
Torque 20, 31
Torque boost 108
manual torque boost.....108
Over-excitation 108
trip..... 339
fault trips 339
fault/warning list.....234
trip condition monitor 68
trip status reset.....229
Troubleshooting Fault Trips 344

troubleshooting.....339
other faults.....347
Troubleshooting Fault Trips.....344

U

U/V/W terminal.....30, 31, 347
Under Load
under load trip..... 224, 235, 339
under load warning..... 224, 235, 343
under load trip..... Refer to Under Load
Unipolar.....38
update.....249
Up-Down Operation.....139
User V/F pattern Operation.....106
Using the keypad.....54
groups/codes.....55
Jump Code.....56

V

V/F control.....104
Linear V/F pattern operation.....104
square reduction V/F pattern operation
.....105
User V/F pattern Operation.....106
V1 terminal.....38
Variable torque load.....106, 168
voltage drop.....31
Voltage Drop.....12
Voltage/current output terminal..Refer to AO terminal
VR terminal.....38, 75, 81

W

warning.....339
fault/warning list.....234
warning messages.....343
Wiring.....20
3 core cables.....31
Control terminal board wiring.....32
Copper cable.....20
Cover disassembly.....21
Ferrite.....41
Ground.....24
Power terminal board wiring.....27
Pre-insulated Crimp Terminal.....40
Re-assembling the covers.....45
Wiring length.....31, 41
WM(write mode error).....250